HBE hydraulic components

Solutions for Fluid Technology

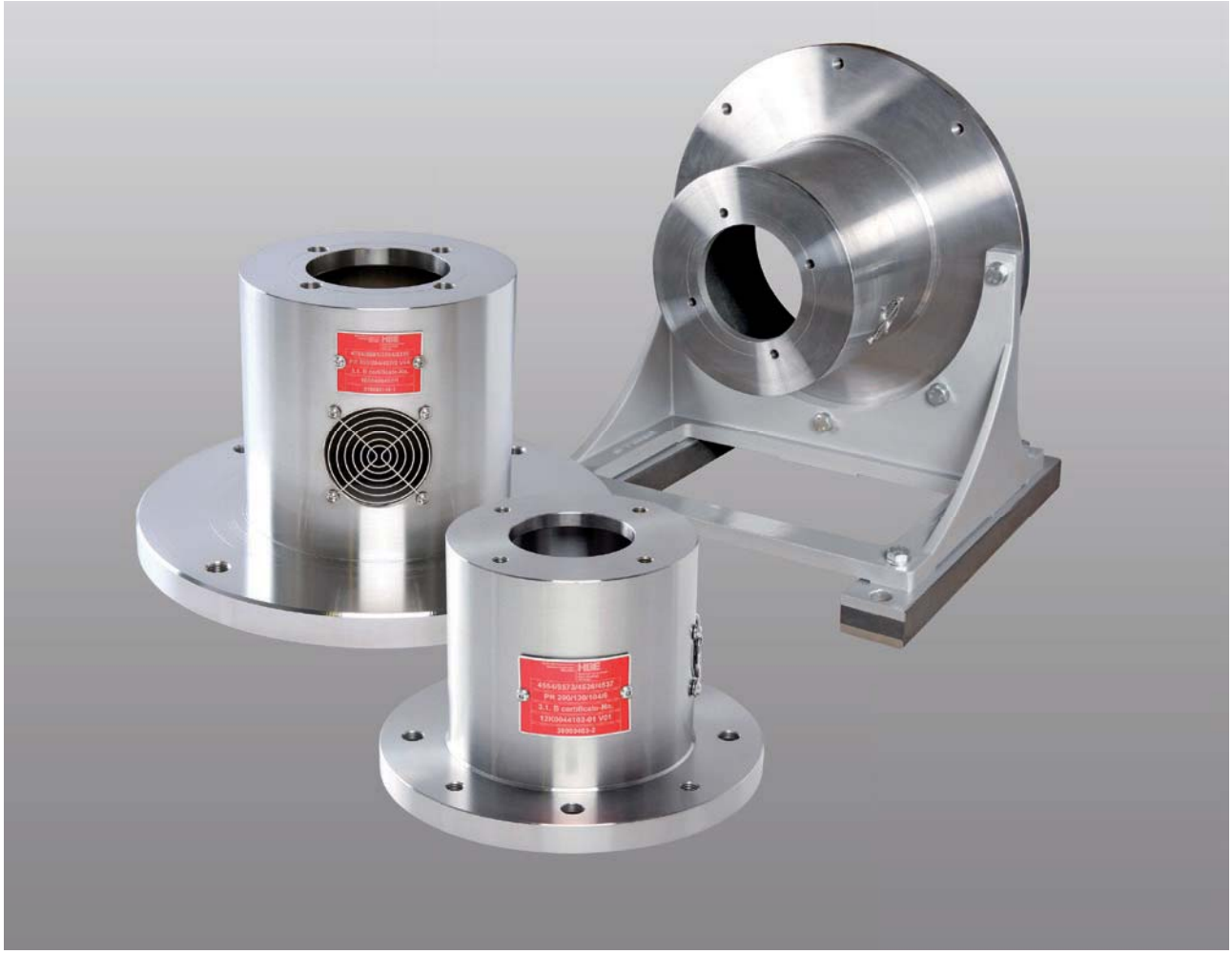

带冷却器钟罩

BELLHOUSINGS AND ACCESSORIES

钟罩和附件

BELLHOUSINGS AND ACCESSORIES

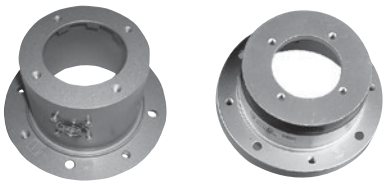

刚性钟罩
带减震元件的钟罩

- IEC电机和 泵之间的连接部件
- 对于大多数液压泵，保有库存可以很快发货
- 符合德标VDMA 24561的刚性钟罩 (A型) 和 减震型钟罩 (B型)
- 标准系列的钟罩是铝制的
- 所有尺寸都可以在短期内提供钢制钟罩，甚至不锈钢材质
- 我们 P+ 计算软件可以方便选择所需的钟罩和联轴器，免费提供 下载网址 **www.hbe-hydraulics.com**

BELLHOUSINGS RIGID
BELLHOUSINGS DAMPED

- Connection elements between IEC electric and petrol motor and hydraulic pump
- Available for nearly all hydraulic pumps ex stock at short notice
- Rigid (Form A) and noise absorbing model (Form B) according to VDMA 24561
- Standard bellhousings made of aluminium
- Bellhousings made of steel are available in all dimensions at short notice – also in stainless
- Our P+Calculator for easy selection of the required bell-housing and type of coupling is available free of charge unter **www.hbe-hydraulics.com**

NEMA 连接法兰

- 适用于美标NEMA电机连接法兰，和标准钟罩

NEMA ADAPTOR

- Adapter for NEMA motors (U.S. standard) in conjunction with standard bellhousings

钟罩脚架

- 用于电机-钟罩-泵水平安装的铝制钟罩脚架
- 可以分别安装/拆装 电机和泵

FOOTBRACKETS

- Aluminium foot brackets for the horizontal installation of motor-bellhousing-pump
- Enables separate assembly/disassembly of motor and pump

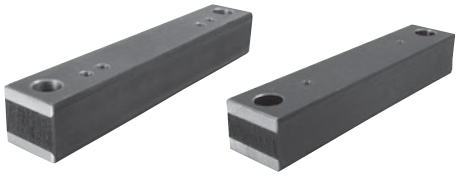

减震条

- 用来减少噪音和隔绝震动
- 适用于IEC 和 NEMA电机的成品和脚架 都有库存

DAMPING RODS

- Applied to reduce noise and dampen vibrations
- Finish-worked for IEC and NEMA motors and foot brackets available ex stock

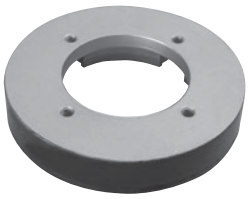

减震法兰

- 减震法兰需和铝或钢制钟罩 以及泵脚架配合使用
- 两个表面有硫化橡胶的金属之间没有接触
- 噪音可以降低多达 8 dB (A)
- 材质为铝和丁腈橡胶

DAMPING FLANGES

- Damping flanges are used in conjunction with aluminium or steel bellhousings as well as pump brackets
- No metallic bonding of the two vulcanised flange surfaces
- Sound level reduction up to 8 dB (A)
- Motor oil aluminium / Perbunan Aluminium

减震环

- 按V1设计, 应用于钟罩和油箱之间 或钟罩和按IMB5设计的脚架之间
- 两个表面有硫化橡胶的金属之间没有接触
- 噪音可以降低约 3-5 dB (A)
- 可靠性设计

DAMPING RINGS

- With V1 design, application between bellhousing and oil tank cover or between bell housing and foot bracket with IMB 5 design
- No metallic bonding of the two vulcanised assembly flanges
- Noise reduction of approx. 3-5 dB (A)
- Fail safe design

安装法兰

- 可以简化按V1设计的电机和泵包括压力管线的拆装流程

MOUNTING FLANGES

- Simplified assembly/disassembly of the drive unit motor/pump incl. pressure line with V1 design

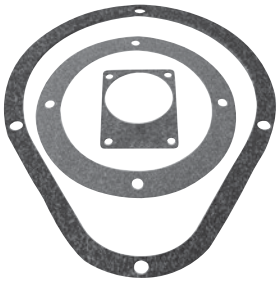

垫圈

- 橡胶软木制的垫圈可以用于钟罩, 安装法兰和齿轮泵

GASKETS

- Gaskets made from rubberised cork for bell housings, assembly flanges and gear pumps

按照VDMA24561 标准A 的刚性圆形钟罩

ROUND BELLHOUSINGS RIGID ACC. TO VDMA 24561 SIZE A

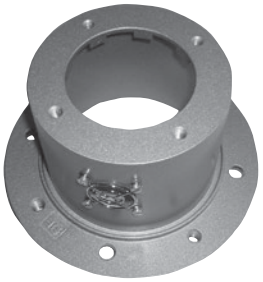

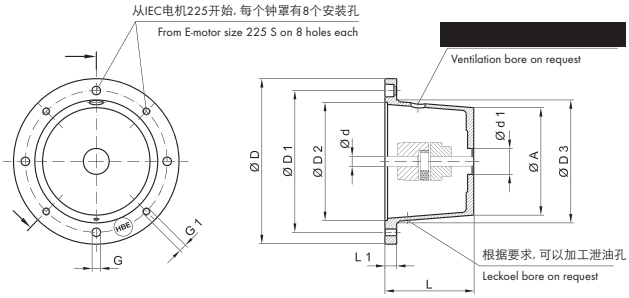

产品描述

- 用于 IEC 电机和液压泵之间的连接
- 库存几乎可以满足市场上所有液压泵的要求
- 两端安装面都经过加工
- 保证电机轴和泵轴的同轴度
- 标准钟罩为铝制
- 也可以根据客户要求快速提供钢制钟罩
- 通过选型计算软件可以选择出合适的钟罩 可垂询 info@hbe-hydraulics.com

PRODUCT DESCRIPTION

- Connection elements between IEC motor and hydraulic pump
- Available for nearly all hydraulic pumps ex stock at short notice
- Both mounting sides are finished
- Centred motor shaft and pump shaft
- Standard bellhousings made of aluminium
- Bellhousings made of steel are available in all dimensions at short notice
- For the type of bellhousing requested, please view our calculation programme on CD-ROM, available at info@hbe-hydraulics.com

用于结构类型IMB5-IMB 35-IM V1的电机的传动部件

FOR ELECTRIC MOTORS FRAME IMB5-IMB 35-IM V1

IEC电机 尺寸 电机轴 (直径 x 长度) IEC-MOTOR SIZE SHAFT (d x L)	电机功率 KW at n= 1500 min-1	钟罩 BELLHOUSING	弹性联轴器 ELASTIC COUPLING	脚架 FOOT BRACKET	垫圈 GASKET	尺寸 毫米/DIMENSIONS mm									
						电机侧 MOTOR SIDE								泵侧 PUMP SIDE	
		尺寸/SIZE	尺寸/SIZE	尺寸/SIZE	尺寸/SIZE	ø D	ø D_1	ø D_2	ø D_3	L	L_1	G	G1	ø A	$d_{1\,min}$
63 (11 x 23)	0,12-0,18	PR 140/95/...	19/24	-	D 140 GK	140	115	95	95	95	15	9	M8	90	25
		PR 140/105/...								105	25				
		PR 140/115/...								115	35				
71 (14 x 30)	0,25-0,37	PR 160/70/...*	19/24	PTFL 160	D 160 GK	160	130	110	110	70	13	9	M8	107	22
		PR 160/80/... VDMA								80	13			106	20
		PR 160/90/... VDMA								90	13			105	20
		PR 160/100/...*								100	19			104	39
		PR 160/115/...*								115	34			104	39
		PR 163/80-95/...**								80-95	19-34			164	60
		PR 163/100-115/...**								100-115	19-34			164	60
80 (19 x 40) 90 S + L (24 x 50)	0,55-0,75 1,1-1,5	PR 200/80/...*	19/24	PTFL 200 PTFS 200	D 200 GK	200	165	130	145	80	16	11	M10	128	25
		PR 200/90/...*								90				127	25
		PR 200/100/... VDMA								100				127	25
		PR 200/110/... VDMA								110				126	25
		PR 200/118/... VDMA								118				126	25
		PR 200/124/... VDMA								124				125	25
		PR 200/135/...*								135				125	25
		PR 200/140/... VDMA								140				125	25
		PR 203/105/...**								105				170	96
		PR 203/115/...**								115				170	96
		PR 203/124/... VDMA**								124				170	96
		PR 203/140/... VDMA**								140				170	96
		PR 203/148/...**								148				170	96
100 L 112 M (28 x 60)	2,2-4	PR 250/115/...*	24/30	PTFL 250 PTFS 250	D 250 GK	250	215	180	190	115	19	14	M12	178	25
		PR 250/120/... VDMA								120				178	42
		PR 250/124/... VDMA								124				177	42
		PR 250/128/... VDMA								128				177	42
		PR 250/135/... VDMA								135				177	42
		PR 250/148/... VDMA								148				176	58
		PR 250/175/... VDMA								175				175	58

IEC电机 尺寸 电机轴 (直径 x 长度) IEC-MOTOR SIZE SHAFT (d x L)	电机功率 KW at n= 1500 min⁻¹	钟罩 BELLHOUSING	弹性联轴器 ELASTIC COUPLING	脚架 FOOT BRACKET	垫圈 GASKET	尺寸 毫米/DIMENSIONS mm									
						电机侧 MOTOR SIDE								泵侧 PUMP SIDE	
		TYP / SIZE	TYP / SIZE	TYP / SIZE	TYP / SIZE	⌀ D	⌀ D_1	⌀ D_2	⌀ D_3	L	L_1	G	G1	⌀ A	$d_{1\,min}$
132 S+M (38 x 80)	5,5-7,5	PR 300/144/... VDMA	28/38	PTFL 300 PTFS 300	D 300 GK	300	265	230	234	144	20	14	M12	224	35
		PR 300/150/... VDMA								150				223	43
		PR 300/155/... VDMA								155				223	50
		PR 300/168/... VDMA								168				222	60
		PR 300/196/... VDMA								196				220	77
		PR 300/196-210/... *								196-210	20-35			218	100
160 M+L (42 x 110) 180 M+L (48 x 110)	11-15	PR 350/173/... *	38/45 (11-15 KW) 42/55 (18,5-22 KW)	PTFL 350 PTFS 350	D 350 GK	350	300	250	260	173	25	18	M16	239	35
		PR 350/188/... VDMA								188				238	50
		PR 350/204/... VDMA								204				237	56
	18,5-22	PR 350/228/... VDMA								228				235	56
		PR 350/256/... VDMA								256				232	97
200 L (55 x 110)	30	PR 400/188/...*	42/55	PTFS 400	D 400 GK	400	350	300	300	188	25	18	M16	270	35
		PR 400/204/... VDMA								204				267	60
		PR 400/211/...*								211				266	60
		PR 400/228/... VDMA								228				263	77
		PR 400/256/... VDMA								256				258	97
		PR 400/271/...*								271	41			260	100
225 S+M (60 x 140)	37-45	PR 450/217/...*	48/60	PTFS 450	D 450 GK	450	400	350	350	217	25	18	M16	300	50
		PR 450/222/... *								222				299	50
		PR 450/234/... VDMA								234				296	50
		PR 450/240/...*								240				295	80
		PR 450/262/.... VDMA								262				290	100
		PR 450/285/... VDMA								285				286	100
		PR 450/315/... VDMA								315				280	100
250 M (65 x 140) 280 S+M (75 x 140)	55	PR 550/230/... *	55/70 (55 KW) 65/75 (75-90 KW)	PTFS 550	D 550 GK	550	500	450	450	230	25	18	M16	362	50
		PR 550/248/... VDMA								248				359	100
		PR 550/265/... VDMA								265				356	100
	75-90	PR 550/275/... VDMA								275				354	120
		PR 550/295/... VDMA								295				350	120
		PR 550/315/... VDMA								315				347	120
315 S+M 315 L (80 x 170)	110-200	PR 660/285/... *	75/90 (110-132 KW) 90/100 (160-200 KW)	PTFS 660	D 660 GK	660	600	550	550	285	32	22	M20	490	125
		PR 660/300/... *								300				487	125
		PR 660/310/... VDMA								310				425	125
		PR 660/330/... VDMA								330				416	125
		PR 660/345/... VDMA								345				410	125
355 L/400 L (100 x 210)	250-400	PR 800/335/...*	90/100	-	-	800	740	680	660	335	50	22	M20	490	125
		PR 800/350/...*								350				487	125
		PR 800/360/...*								360				425	125
		PR 800/380/...*								380				416	125
		PR 800/395/...*								395				410	125

订货代号: 钟罩

ORDERING CODE: BELLHOUSING

PR 250/124/130

- 圆形钟罩/Bellhousing round
- 电机法兰直径 ⌀/Motor flange ⌀
- 长度 L/Length L
- 泵侧, 打孔标注/Internal boring code, pump side

订货代号: 联轴器

ORDERING CODE: COUPLING

24/30 22-28

- 联轴器尺寸代码/Size of coupling
- ⌀ 泵轴直径/⌀ pump shaft
- ⌀ 电机轴直径/⌀ motor shaft

*不符合VDMA标准
** 只适用于水平安装

*Version is not acc. to VDMA
** only intended for horizontal installation

安装建议可以在相关网址下载
Assembly instructions are available for download here:
www.hbe-hydraulics.com

带减震法兰，按照VDMA 24561B 的圆形钟罩

ROUND BELLHOUSINGS WITH DAMPING FLANGE ACC. TO VDMA 24561 SIZE B

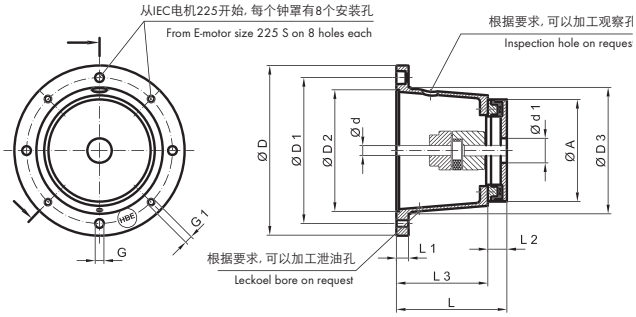

产品描述

- 用于 IEC 电机和液压泵之间的连接配弹性减震法兰
- 金属面之间没有接触
- 取决于泵的结构，泵和电机总体噪音可以降低达
- 标准钟罩是铝制 减震法兰的材质是铝和硫化丁苯橡胶
- 可以水平或立式安装
- 矿物油最高 80°C
- 通过选型计算软件可以选择出合适的钟罩 可垂询 info@hbe-hydraulics.com

PRODUCT DESCRIPTION

- Connection element with elastic damping flange between IEC motor and hydraulic pump
- No metallic connection
- Reduction of noise level of the pump motor unit possible up 8 dB (A) depending on pump construction
- Standard bellhousings made of aluminium, damping flanges made of aluminium / perbunan vulcanised
- Horizontal and vertical application possible
- Resistance: mineral oil 80°C max.
- For the type of bellhousing requested, please view our calculation programme on CD-ROM, available at info@hbe-hydraulics.com

用于结构类型 IMB5-IMB35-IM V1的电机

FOR ELECTRIC MOTORS FRAME IMB5-IMB 35-IM V1

IEC电机 尺寸 电机轴 (直径 x 长度) IEC-MOTOR SIZE SHAFT (d x L)	电机 功率 KW at n= 1500 min⁻¹	钟罩和减震法兰 BELLHOUSING AND DAMPING FLANGE	弹性联轴器 ELASTIC COUPLING	脚架 FOOT BRACKET	垫圈 GASKET	尺寸 毫米/DIMENSIONS mm											
						电机侧 MOTOR SIDE										泵侧 PUMP SIDE	
		尺寸/ SIZE	尺寸/ SIZE	尺寸/ SIZE	尺寸/ SIZE	⌀ D	⌀ D_1	⌀ D_2	⌀ D_3	L	L_3	L_2	L_1	G	G1	⌀ A	$d_{1\,min}$
80 (19 x 40) 90 S + L (24 x 50)	0,55-0,75 1,1-1,5	PR 200/100 DF 200/..VDMA	19/24	PTFL 200 PTFS 200	D 200 GK	200	165	130	145	100	70	30	16	9	M8	139	31
		PR 200/110 DF 200/..VDMA								110	80		16				
		PR 200/118 DF 200/..VDMA								11 8	88		14				
		PR 200/124 DF 200/..VDMA								124	94		30				
		PR 200/140 DF 200/..VDMA								140	110		16				
100 L 112 M (28 x 60)	2,2-4	PR 250/120 DF 250/..VDMA	24/30	PTFL 250 PTFS 250	D 250 GK	250	215	180	190	120	85	35	25	14	M12	186	32
		PR 250/124 DF 200/..VDMA								124	94	30	18			139	31
		PR 250/128 DF 250/..VDMA								128	93	35	19			186	32
		PR 250/135 DF 250/..VDMA								135	100	35	19			186	32
		PR 250/148 DF 200/..VDMA								148	120	28	19			139	31
		PR 250/148 DF 250/..VDMA								148	115	33	19			186	32
		PR 250/175 DF 250/..VDMA								175	140	35	18			186	32
132 S+M (38 x 80)	5,5-7,5	PR 300/144 DF 250/..VDMA	28/38	PTFL 300 PTFS 300	D 300 GK	300	265	230	234	144	109	35	20	14	M12	186	32
		PR 300/150 DF 200/..VDMA								150	120	30				139	31
		PR 300/150 DF 250/..VDMA								150	115	35				186	32
		PR 300/155 DF 250/..VDMA								155	120	35				186	32
		PR 300/155 DF 300/..VDMA								155	115	40				222	32
		PR 300/168 DF 250/..VDMA								168	133	35				186	32
		PR 300/195 DF 300/..VDMA								195	155	40				222	32

安装建议可以在相关网址下载 Assembly instructions are available for download here: www.hbe-hydraulics.com

IEC电机 尺寸 电机轴 (直径 x 长度) IEC-MOTOR SIZE SHAFT (d x L)	电机功率 KW at n= 1500 min-1	钟罩和减震法兰 BELLHOUSING AND DAMPING FLANGE	弹性联轴器 ELASTIC COUPLING	脚架 FOOT BRACKET	垫圈 GASKET	尺寸 毫米/DIMENSIONS mm											
						电机侧 MOTOR SIDE										泵侧 PUMP SIDE	
		尺寸/SIZE	尺寸/SIZE	尺寸/SIZE	尺寸/SIZE	⌀ D	⌀ D_1	⌀ D_2	⌀ D_3	L	L_3	L_2	L_1	G	G1	⌀ A	$d_{1\,min}$
160 M+L (42 x 110)	11-15	PR 350/188 DF 250/...VDMA	38/45 (11-15)	PTFL 350 PTFS 350	D 350 GK	350	300	250	260	188	153	35	25	18	M16	186	32
180 M+L (48 x 110)	18,5-22	PR 350/204 DF 300/...VDMA	42/55 (18,5-22)							204	164	40				222	32
		PR 350/228 DF 300/...VDMA								228	188	40				222	32
		PR 350/256 DF 350/...VDMA								256	211	45				258	46
200 L (55 x 110)	30	PR 400/204 DF 300/...VDMA	42/55	PTFS 400	D 400 GK	400	350	300	300	204	164	40	25	18	M16	222	32
		PR 400/228 DF 300/...VDMA								228	188	40				222	32
		PR 400/256 DF 350/...VDMA								256	211	45				258	46
225 S+M (60 x 140)	37-45	PR 450/234 DF 300/...VDMA	48/60	PTFS 450	D 450 GK	450	400	350	350	234	194	40	25	18	M16	222	32
		PR 450/262 DF 300/...VDMA								262	222	40				222	32
		PR 450/262 DF 350/...VDMA								262	217	45				258	46
		PR 450/285 DF 350/...VDMA								285	240	45				258	46
		PR 450/315 DF 350/...VDMA								315	270	45				258	46
250 M (65 x 140)	55	PR 550/248 DF 350/...VDMA	55/70 (55)	PTFS 550	D 550 GK	550	500	450	450	248	203	45	25	18	M16	258	46
		PR 550/265 DF 250/...VDMA								265	230	35				186	32
		PR 550/265 DF 350/...VDMA								265	220	45				258	46
		PR 550/275 DF 350/...VDMA								275	230	45				258	46
280 S (75 x 140)	75-90	PR 550/275 DF 400/...VDMA	65/75 (75-90)							275	215	60				365	120
		PR 550/293 DF 350/...VDMA								293	248	45				258	46
		PR 550/315 DF 300/...VDMA								315	275	40				222	32
		PR 550/315 DF 350/...VDMA								315	270	45				258	46
315 S+M 315 L (80 x 170)	110-200	PR 660/310 DF 350/...VDMA	90/100	PTFS 660	D 660 GK	660	600	550	550	310	265	45	32	22	M 20	258	46
		PR 660/330 DF 350/...VDMA								330	285	45				258	46
		PR 660/345 DF 350/...VDMA								345	300	45				258	46
		PR 660/345 DF 400/...VDMA								345	285	60				365	120
355 L/400 L (100 x 210)	250-400	PR 800/360 DF 350/...	90/100	-	-	800	740	680	680	360	315	45	50	22	M20	258	46
		PR 800/375 DF 400/...								375	315	60				365	120
		PR 800/380 DF 350/...								380	335	45				258	46
		PR 800/395 DF 400/...								395	335	60				365	120
		PR 800/410 DF 400/...								410	350	60				365	120

订货代码:
配减震法兰的钟罩

ORDERING CODE:
BELLHOUSING WITH DAMPING FLANGE

PR 450/234/DF 300/...

- 圆形钟罩/Bellhousing round
- 电机法兰直径 ⌀/Motor flange ⌀
- 总长度 L/Total length L
- 减震法兰代码/Damping flange size
- 泵侧，打孔标注 /Internal boring code, pump side

订货代码: 联轴器

ORDERING CODE: COUPLING

48/60 30-60

- 联轴器代码/Size of coupling
- ⌀ 泵轴直径/⌀ pump shaft
- ⌀ 电机轴直径/⌀ motor shaft

径向负荷

RADIAL WEIGH LOAD

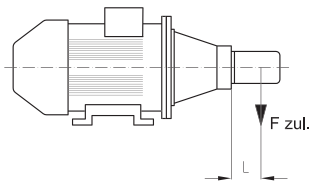

S = 标准型/standard
H = 加强型/hard

减震法兰 DAMPING FLANGE	DF 200/...		DF 250/16		DF 300/32		DF 350/63		DF 400/84	
	S	H	S	H	S	H	S	H	S	H
负荷点与中心的距离 L CENTROIDAL DISTANCE FOR RADIAL LOAD L mm	70		100		100		200		200	
温度达到60° C时 最大恒定负载 PERM. WEIGHT-FORCE UP TO 60° C F (N)	300	-	1100	1300	1600	1900	1400	2000	3000	4000

用于矩形泵连接面的钟罩

BELLHOUSINGS FOR RECTANGULAR PUMP CONNECTIONS

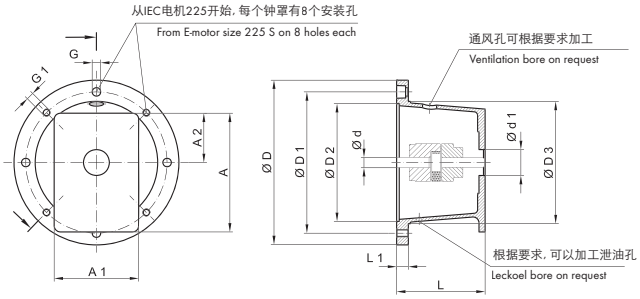

产品描述

- 两端法兰都经过加工
- 保证电机轴和泵轴的同轴度
- 标准钟罩为铝制
- 我们的选型程序可以在相关网址免费下载 www.hbe-hydraulics.com

PRODUCT DESCRIPTION

- Both flange sides are finished
- Centred motor shaft and pump shaft
- Bellhousings made of aluminium
- Our selection software is available at www.hbe-hydraulics.com free of charge.

IEC电机 尺寸 电机轴(直径 x 长度) IEC-MOTOR SIZE SHAFT (d x L)	电机功率 KW at n= 1500 min⁻¹	安装方式 FRAME	钟罩 BELLHOUSING	脚架 FOOT BRACKET	垫圈 GASKET	尺寸 毫米/DIMENSIONS mm											
						电机侧 MOTOR SIDE								泵侧 PUMP SIDE			
			尺寸/SIZE	尺寸/SIZE	尺寸/SIZE	⌀D	⌀D_1	⌀D_2	⌀D_3	L	L_1	G	G1	⌀ A	⌀ A_1	⌀ A_2	d_{1min}
63 (11 x 23)	0,12-0,18	IMB 14	PE 90/60/...	-	-	90	75	60	62	60	10	-	7	90	69	34	22
			PE 120/85/...			120	100	80	80	85	12	-		120	90	45	22
		IMB 5	PE 140/60/...			140	115	95	100	60	11	9	M8	90	69	34	22
71 (14 x 30)	0,25-0,37	IMB 14	PE 105/70/...	-	D 140	105	85	70	70	70	10	9	7	90	69	34	22
			PE 140/95/...			140	115	95	100	95	12		9	90	69	34	22
		IMB 5	PRE 160/70/...	PTFL 160	D 160	160	130	110	110	70	13	9	M8	90	66	34	22
			PE 160/95/...							95	14			120	90	45	25,4
80 (19 x 40)	0,55-0,75	IMB 14	PE 120/85/...	-	-	120	100	80	80	85	12	-	7	120	90	45	22
			PRE 160/80/...	PTFL 160	D 160	160	130	110	110	80	13	9	9	90	66	34	22
			PE 160/95/...							95	14			120	90	45	25,4
		IMB 5	PRE 200/80/...	PTFL 200 PTFS 200	D 200	200	165	130	145	80	16	11	M10	Ø 128			22
			PE 200/95/...							95	15			118	86	43	36,5
			PE 200/126/...							126	16		11	180	158	65	50,8
90 S+L (24 x 50)	1,1-1,5	IMB 14	PE 140/95/...	-	D 140	140	115	95	100	95	12	9	9	120	90	45	25,4
			PRE 160/90/...	PTFL 160	D 160	160	130	110	110	90	13	9	9	90	66	34	22
			PE 160/105/...							105	24			120	90	45	25,4
		IMB 5	PRE 200/90/...	PTFL 200 PTFS 200	D 200	200	165	130	145	90	16	11	M10	Ø 127			22
			PE 200/98/...							98	15		M10	118	86	43	36,5
			PE 200/126/...							126	16		11	180	158	65	50,8
100 L 112 M (28 x 60)	2,2-4	IMB 14	PE 160/108/...	PTFL 160	D 160	160	130	110	110	108	27	9	9	120	90	45	25,4
		IMB 5	PRE 250/115/...	PTFL 250 PTFS 250	D 250	250	215	180	190	115	19	14	M12	Ø 178			36,5
			PE 250/1/115/...								21			170	120	59	50,8
132 S+M (38 x 80)	5,5-7,5	IMB 5	PRE 300/144/...	PTFL 300 PTFS 300	D 300	300	265	230	234	144	20		M12	Ø 224			36,5
			PE 300/2/143							143	21			180	158	62	50,8
160 M+L (42 x 110) 180 M+L (48 x 110)	11-15	IMB 5	PRE 350/173/...	PTFL 350 PTFS 350	D 350	350	300	250	260	173	25	18	M16	Ø 239			36,5
	18,5-22		PRE 350/197/...							197				230	175	77	60
200 L (55 x 110)	30	IMB 5	PRE 400/188/...	PTFS 400	D 400	400	350	300	300	188	25	18	M16	Ø 270			36,5
225 S+M (60 x 140)	37-45	IMB 5	PRE 450/217/...	PTFS 450	D 450	450	400	350	350	217	25	18	M16	Ø 300			50,8
			PRE 450/234/...							234				Ø 297			
250 M (65 x 140) 280 S+M (75 x 140)	55	IMB 5	PRE 550/230/...	PTFS 550	D 550	550	500	450	450	230	26	18	M 16	Ø 366			56
	75-90																

安装建议可以在相关网址下载 Assembly instructions are available for download here: www.hbe-hydraulics.com

用于配减震法兰的矩形钟罩DF-ZRP

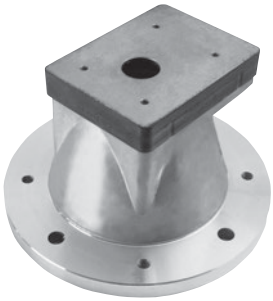

RECTANGULAR BELLHOUSINGS WITH DAMPING FLANGE DF-ZRP

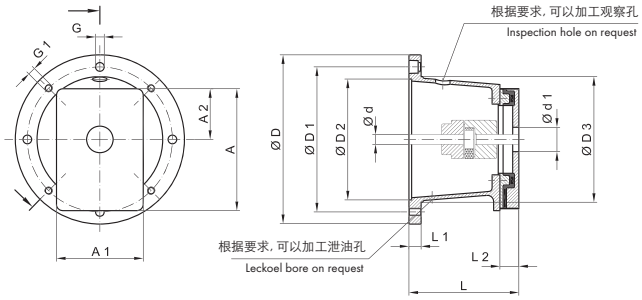

产品描述

- 金属面之间没有接触
- 取决于泵的结构，泵和电机总体噪音可以降低达 5 dB (A)
- 水平安装和立式安装都可以
- 抗油性：矿物油最高 80°C
- 我们的选型程序可以在相关网址免费下载 www.hbe-hydraulics.com

PRODUCT DESCRIPTION

- No metallic connection
- Reduction of noise level of the pump motor unit possible up 5 dB (A) depending on pump construction
- Bellhousings made of aluminium
- Horizontal and vertical application possible
- Resistance: mineral oil 80°C max.
- Our selection software is available at www.hbe-hydraulics.com free of charge.

IEC电机尺寸 电机轴(直径 x 长度) IEC-MOTOR SIZE SHAFT (d x L)	电机功率 KW at n= 1500 min⁻¹	安装方式 FRAME	钟罩和减震法兰 BELLHOUSING AND DAMPING FLANGE	弹性联轴器 ELASTIC COUPLING	脚架 FOOT BRACKET	垫圈 GASKET	尺寸 毫米/DIMENSIONS mm 电机侧 MOTOR SIDE									泵侧 PUMP SIDE			
			尺寸/SIZE	尺寸/SIZE	尺寸/SIZE	尺寸/SIZE	øD	$øD_1$	$øD_2$	$øD_3$	L	L_1	L_2	G	G_1	øA	$øA_1$	$øA_2$	d_{1min}
71 (14 x 30)	0,25-0,37	IMB 5 IMV 1	PRE 160/90 DFZRP/...	19/24	PTFL 160	D 160 GK	160	130	110	110	90	13	20	9	M8	121	92	46	22
80 (19 x 40)	0,55-0,75	IMB 14	PRE 160/90 DFZRP/...	19/24 24/30	PTFL 160	D 160 GK	160	130	110	110	90	14	20	9	9	121	92	46	22
		IMB 5 IMV 1	PRE 200/100 DFZRP/...		PTFL 200 PTFS 200	D 200 GK	200	165	130	145	100	16		11	M10				
			PRE 200/118 DFZRP/...								118	15							
90 S+L (24 x 50)	1,1-1,5	IMB 14	PRE 160/90 DFZRP/...	19/24 24/30	PTFL 160	D 160 GK	160	130	110	110	90	13	20	9	9	121	92	46	22
		IMB 5 IMV 1	PRE 200/100 DFZRP/... PRE 200/118 DFZRP/...		PTFL 200 PTFS 200	D 200GK	200	165	130	145	100	16		11	M10				
											118	15							
100 L 112 M (28 x 60)	2,2-4	IMB 14	PRE 160/110 DFZRP/...	24/30	PTFL 160	D 160 GK	160	130	110	110	110	34	20	9	9	121	92	46	22
		IMB 5 IMV 1	PRE 250/114 DFZRP/...		PTFL 250 PTFS 250	D 250 GK	250	215	180	190	114	19		14	M12				
132 S+M (38 x 80)	5,5-7,5	IMB 5 IMV 1	PRE 300/153 DFZRP/...	28/38	PTFL 300 PTFS 300	D 300 GK	300	265	230	234	153	20	20	14	M12	121	92	46	22

对于功率更高的电机160 - 280，请参考配减震法兰的圆形钟罩的参数表

For higher driving power of motor size 160–280 please see dimension sheet round bellhousings with damping flange

订货代码：配减震法兰的钟罩

ORDERING CODE: BELLHOUSING WITH DAMPING FLANGE

PE 250 / 114 / DFZRP / ...

- 矩形钟罩 / Bellhousing rectangular
- 电机法兰直径 ø / Motor flange ø
- 总长度 L / Total length L
- 减震法兰代码 / Damping flange size
- 泵侧，内部打孔标注 / Internal boring code, pump side

订货代码：联轴器

ORDERING CODE: COUPLING

24 / 30 B17–24

- 联轴器代码 / Size of coupling
- ø 泵轴直径 / ø pump shaft
- ø 电机轴直径 / ø motor shaft

适用于本田工业发动机的矩形钟罩和弹性联轴器

RECTANGULAR BELLHOUSINGS WITH ELASTIC COUPLING FOR *HONDA* INDUSTRIAL MOTORS

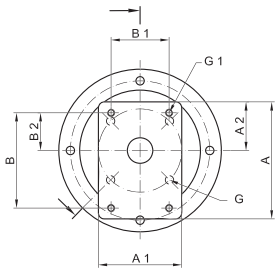

GX 100-160

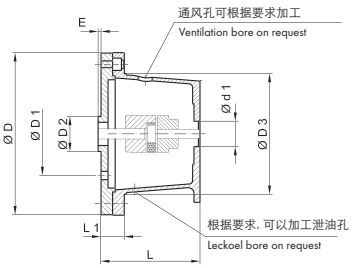

GX 240-390

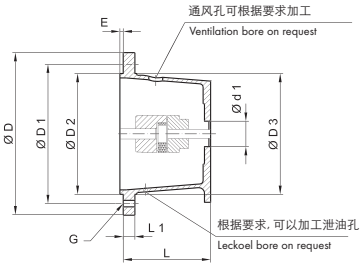

电机型号 MOTOR TYPE	轴代码 SHAFT CODE	钟罩代码 BELLHOUSING	泵侧/锥度 PUMP SIDE / TAPER	联轴器代码 COUPLING	尺寸 毫米 /DIMENSIONS mm															
					电机侧 / MOTOR SIDE								泵侧 / PUMP SIDE							
		尺寸/ SIZE	尺寸/ SIZE	尺寸/ SIZE	⌀D	⌀D_1	⌀D_2	⌀D_3	L	L_1	E	G	⌀A	⌀A_1	⌀A_2	d_1	B	B_1	B_2	G_1
GX 100	S	PE 160/95/10 HO	1:8	24/30 N1-15	160	92	41,2	110	95	39	2,5	9	90	69	34	25,4	72	52,4	26,2	M6
	Q	PE 160/105/10 HO		24/30 N1-ED					105	49										
GX 110 GX 120/120 K1	S + L	PE 160/95/10 HO	1:8	24/30 N1-18 N5	160	92	41,2	110	95	39	2,5	9	90	69	34	25,4	72	52,4	26,2	M6
	H	PE 160/95/10 HO		24/30 N1-A					95	39										
	Q	PE 160/105/10 HO		24/30 N1-A					105	49										
GX 140 GX 160/160 K1	S + L	PE 160/95/10 HO	1:8	24/30 N1-20N5	160	92	41,2	110	95	39	2,5	9	90	69	34	25,4	72	52,4	26,2	M6
		PE 160/110/20 HO	1:8	24/30 N2 (a)-20N5					110	29			120	90	45	36,5	96	71,5	32,5	M8
		PE 160/110/70 HO	1:5	24/30 B17-20N5					110	29			120	90	45	80	100	72	34,5	M8
	H	PE 160/95/10 HO	1:8	24/30 N1-A					95	39			90	69	34	25,4	72	52,4	26,2	M6
	Q	PE 160/105/10 HO	1:8	24/30 N1-A					105	49										
GX 240/240 K1 GX 270 GX 340/340 K1 GX 390/390 K1	S + L	PE 160/108,5/10 HO	1:8	24/30 N1-25 N7	160	127	110	110	108,5	27,5	2,5	9	120	90	45	25,4	72	52,4	26,2	M6
		PE 160/108,5/20 HO	1:8	28/38 N2 (a) K-25N7												36,5	96	71,5	32,5	M8
		PE 160/108,5/70 HO	1:5	28/38 B17-25 N7												80	100	72	34,5	M8

适用于久保田工业发动机的矩形钟罩和弹性联轴器

RECTANGULAR BELLHOUSINGS WITH ELASTIC COUPLING FOR *KUBOTA* INDUSTRIAL MOTORS

电机型号 MOTOR TYPE	轴代码 SHAFT CODE	钟罩代码 BELLHOUSING	泵侧/锥度 PUMP SIDE / TAPER	联轴器代码 COUPLING	尺寸 毫米 /DIMENSIONS mm															
					电机侧 / MOTOR SIDE								泵侧 / PUMP SIDE							
		尺寸/ SIZE	尺寸/ SIZE	尺寸/ SIZE	⌀D	⌀D_1	⌀D_2	⌀D_3	L	L_1	E	G	⌀A	⌀A_1	⌀A_2	d_1	B	B_1	B_2	G_1
OC 60 OC 80 OC 95	Q	PE 160/130/10 KU	1:8	24/30 N1-BS 98°	160	113,1	146,1	110	130	49	2	9	120	90	45	25,4	72	52,4	26,2	M6
		PE 160/133/20 KU		MB 28 N2 (a)-BS					133	56						36,5	96	71,5	32,5	M8
		PE 160/133/70 KU	1:5	24/30 B17-BS 98°					133	56						80	100	72	34,5	M8
GH 120 GH 170	Q	PE 160/105/10 KU	1:8	24/30 N1-A 98°	160	92	41,2	110	105	49	2,5	9	90	69	34	25,4	72	52,4	26,2	M6
		PE 160/115/20 KU		24/30 N1-(a)-A98°				110	115	34			120	90	45	36,5	96	71,5	32,5	M8
		PE 160/115/70 KU	1:5	24/30 B17-A 98°				110	115	34			120	90	45	80	100	72	34,5	M8

用于NEMA电机的刚性钟罩, C-TC型 (美国标准)

BELLHOUSINGS FOR NEMA-MOTORS, RIGID TYPES C-TC (U.S. STANDARD)

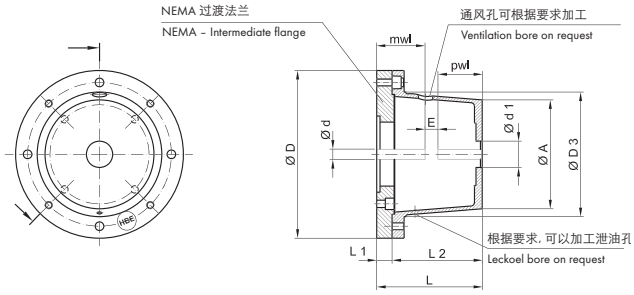

过渡法兰 NEMA NEMA-MOTOR 60 Hz 1800 min-1	HP HP	mwL mwL	ø d 代码 ø d CODE	钟罩 BELL-HOUSING	过渡法兰 NEMA NEMA INTERMEDIATE FLANGE	尺寸 毫米 / DIMENSIONS mm							SOFTEX® 联轴器 SOFTEX® COUPLING	E
						L	L1	L2	D	D1	D3	A		
56 C	0,25-0,75	54,2	ED	PR 200/80	ZF 200/18 PR 200 56-145 TC (5476)	98	18	80	200	200	145	128	19/24	16
				PR 200/90		108		90				127		
				PR 200/100		118		100				127		
				PR 200/110		128		110				126		
				PR 200/118		136		118				126		
143-145 TC	0,5-2	54	G	PR 250/115	ZF 250/23 PR 250 56-145 TC (5467)	138	23	115	250	250	190	178		
				PR 250/120		143		120				178		
				PR 250/124		147		124				177		
				PR 250/128		151		128				177		
				PR 250/135		158		135				177		
				PR 250/148		171		148				176		
182-184 TC	3-5	66,7	SB	PR 250/115	ZF 250/18 PR 250 182-256 TC (5453)	133	18	115	250	250	190	178	24/30	18
				PR 250/120		138		120				178		
213-215 TC	7,5-10	79,4	M	PR 250/124		142		124				177	28/38	20
				PR 250/128		146		128				177		
				PR 250/135		153		135				177		
254- 256 TC	15-20	95,3	N	PR 250/148		166		148				176	38/45	24
				PR 250/175		193		175				175		
182-184 TC	3,5	66,7	SB	PR 300/144	ZF 300/20 PR 300 182-256 TC (5480)	164	20	144	300	300	234	224	24/30	18
				PR 300/150		170		150				223		
213-215 TC	7,5-10	79,4	M	PR 300/155		175		155				223	28/38	20
				PR 300/168		188		168				222		
254-256 TC	15-20	95,3	N	PR 300/196		216		196				220	38/45	24
284-286 TC	25-30	111,1	NM	PR 300/133	ZF 300/20 PR 300 284-286 TC (5475)	153	20	133	300	300	234	224	42/55	26
				PR 300/144		164		144				224		
				PR 300/150		170		150				223		
				PR 300/155		175		155				223		
				PR 300/168		188		168				222		
				PR 300/196		216		196				220		
				PR 300/210		230		210				218		
324-326 TC	40-50	127,0	P	PR 350/188	ZF 350/25 PR 350 324-405 TC (5449)	213	25	188	350	350	260	238	48/60	28
				PR 350/204		229		204				237		
364-365 TC	60-75	142,9	UB	PR 350/228		253		228				235	55/70	30
404-405 TC	100	184,2	WA	PR 350/256		281		256				232	75/90	40
444-445 TC	125-150	215,9	WD	PR 550/248	ZF 550/34 PR 550 444-445 TC (5479)	282	34	248	550	550	450	359	75/90	40
				PR 550/265		299		265				356		
				PR 550/275		309		275				354		
				PR 550/295		329		295				350		
				PR 550/315		349		315				347		

安装建议可以在相关网址下载 Assembly instructions are available for download here: www.hbe-hydraulics.com

用于NEMA电机的刚性钟罩, C-TC型 (美国标准)

BELLHOUSINGS FOR NEMA-MOTORS, RIGID TYPES TD (U.S. STANDARD)

过渡法兰 NEMA NEMA-MOTOR 60 Hz 1800 min-1	HP HP	mwL mwL	ø d 代码 ø d CODE	钟罩 BELL-HOUSING	过渡法兰 NEMA NEMA INTERMEDIATE FLANGE	尺寸 毫米 / DIMENSIONS mm							SOFTEX® 联轴器 SOFTEX® COUPLING	E
						L	L1	L2	D	D1	D3	A		
143-145 TD	0,5-2	57,2	G	PR 250/115	ZF 295/25 PR 250/NEMA (5454)	140	25	115	295	250	190	178	19/24	16
				PR 250/120		145		120				178		
182-184 TD	3-5	70,0	SB	PR 250/124		149		124				177	24/30	18
				PR 250/128		153		128				177		
213-215 TD	7,5-10	85,7	M	PR 250/135		160		135				177	28/38	20
				PR 250/148		173		148				176		
254-256 TD	15-20	101,6	N	PR 300/144	ZF 350/26 PR 300/NEMA (5451)	171	26	144	350	300	234	223	38/45	24
				PR 300/150		176		150				223		
284-286 TD	25-30	117,5	NM	PR 300/155		181		155				223	42/55	26
				PR 300/168		194		168				222		
				PR 300/196		222		196				220		
324-326 TD	40-50	133,3	P	PR 450/217*	ZF 450/25 PR 450/NEMA (5477)	242	25	217	450	450	350	300	48/60	28
				PR 450/222		247		222				299		
364-365 TD	60-75	149,2	UB	PR 450/234*		259		234				296	55/70	30
				PR 450/240		265		240				295		
				PR 450/262		287		262				290		
				PR 450/285		310		285				286		
404-405 TD	100	184,2	WA	PR 550/230	ZF 550/25 PR 550/NEMA (5478)	255	25	230	550	550	450	362	75/90	40
				PR 550/248		273		248				359		
444-445 TD	125-150	215,9	WD	PR 550/265		290		265				356		
				PR 550/275		300		275				354		
				PR 550/295*		320		295				350		
				PR 550/315		340		315				347		

* Monoblock design

*整体设计

订货代码: 确定电机213-215TC钟罩的总长度

pwl= 泵轴的总长度包括定位轴肩以及由于联轴器长度过长所导致的长度差异

比如pwl (泵轴长度)	=	50 mm
比如mwL (电机轴的总长度)	=	79,4 mm
E (电机轴和泵轴之间的距离)	=	20 mm
理论总长度L	=	149,4 mm
而, 实际钟罩长度 L	=	153 mm

ORDERING CODE: DETERMINATION OF THE TOTAL LENGTH OF THE BELLHOUSING MOTOR 213–215 TC

pwl= Total length of pump shaft inclusive centering shoulder and possible difference, if coupling hub longer than carrying length of pump shaft.

pwl (length of pump shaft) e.g.	=	50 mm
mwL (total length of motor shaft) e.g.	=	79.4 mm
E (distance between motor and pump shaft)	=	20 mm
Total length theoretic L	=	149.4 mm
Total length available L	=	153 mm

订货代码: 钟罩/NEMA 过渡法兰/联轴器

PR 250/135/... (泵代码) + ZF 250/18/PR 250/NEMA = L 153 mm
PR 250/135/... (pump code) + ZF 250/18/PR 250/NEMA = L 153 mm

ORDERING CODE: BELLHOUSING/NEMA ADAPTER/COUPLING

联轴器 28/38 „M“ + ø 泵轴直径
Coupling 28/38 „M“ + ø pump shaft

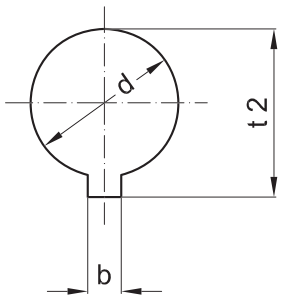

NEMA 电机英制孔 INCH BORES NEMA-MOTOR	公制孔 METRIC BORES	键槽尺寸 DIMENSIONS KEYWAY	
代码 CODE	ø d + 0,03	b + 0,05	t 2 - 0,01
ED	15,89	4,75	18,3
G	22,22	4,75	24,7
SB	28,58	6,35	31,5
M	34,92	7,93	38,6
N	41,25	9,55	45,6
NM	47,625	12,73	53,5
P	53,95	12,73	59,6
UB	60,3	15,87	67,6
WA	73,00	19,05	81,7
Wd	85,725	22,22	95,8

安装建议可以在相关网址下载 Assembly instructions are available for download here: www.hbe-hydraulics.com

依据标准VDMA 24561的钟罩脚架

FOOT BRACKETS ACC. TO VDMA 24561

轻量系列 / LIGHT LINE PTFL

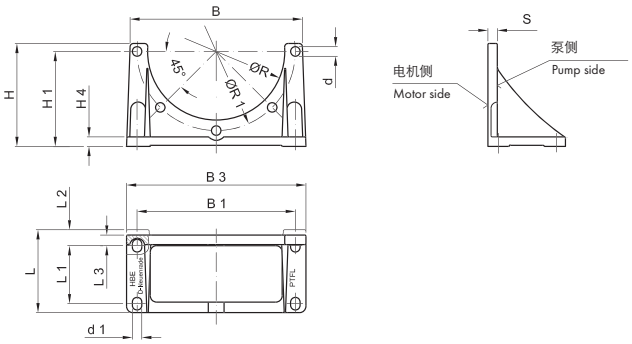

产品描述

- 材质: 铸铝
- PTFL 系列: 轻量化和小型化结构设计
- PTFS 系列: 重型系列, 适合多钟泵
- 适用于IEC电机的卧式和立式结构
- 所有系列都有库存

PRODUCT DESCRIPTION

- Material: Aluminium
- PTFL: Light and space saving construction
- PTFS: Heavy line, especially suitable also for multiple pumps
- Stocking of one IEC motor in case of horizontal and vertical construction
- All types available ex stock

系列 SERIE PTFL	部件号 PART NO.	脚架代码 SIZE	IEC电机代码 IEC MOTOR SIZE	尺寸 / DIMENSIONS mm														
				B	B_3	B_1	L	L_1	L_2	L_3	S	H	H_1	H_4	d_1	R	R_1	d
	4307	PTFL 160	71	160	160	140	80	50	15	7	8	111	100	10	9	110,5	130	9
	4308	PTFL 200	80/90	200	210	180	90	60	15	4	10	125	112	12	11	145,5	165	11
	4309	PTFL 250	100/112	250	252	220	110	60	21	21	12	145	132	15	14	190,5	215	14
	4310	PTFL 300	132	290	295	260	120	80	20	20	16	172	160	18	14	234,5	265	14
	4311	PTFL 350	160/180	340	340	300	147	110	20	20	18	195	180	18	18	261,0	300	18

重型系列 / HEAVY LINE PTFS

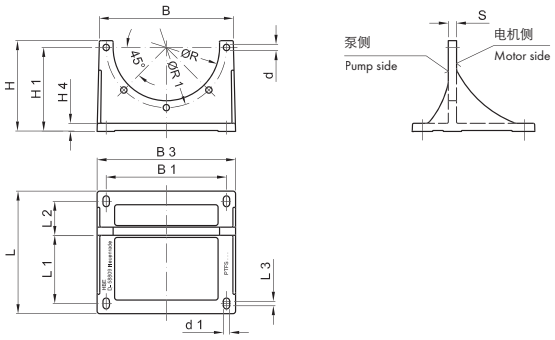

系列 SERIE PTFS	部件号 PART NO.	脚架代码 SIZE	IEC电机代码 IEC MOTOR SIZE	尺寸 / DIMENSIONS mm														
				B	B_3	B_1	L	L_1	L_2	S	H	H_1	H_4	d_1	L_3	R	R_1	d
	4316	PTFS 200	80/90	200	202	165	185	100	50	12	138	125	10	11	8	145,5	165	11,5
	4317	PTFS 250	100/112	250	252	215	230	125	60	14	170	155	14	14	10	190,5	215	14
	4318	PTFS 300	132	300	305	265	270	150	75	18	200	185	18	14	10	234,5	265	14
	4319	PTFS 350	160/180	350	356	300	310	175	90	18	252	235	18	18	12	260,5	300	18
	4320	PTFS 400	200	400	407	350	350	200	100	20	277	260	20	18	12	300,5	350	18
	4321	PTFS 450	225	450	458	400	385	225	110	22	312	295	20	18	12	350,5	400	18
	4322	PTFS 550	250/280	550	560	500	465	275	140	25	367	350	25	18	12	450,5	500	18
	4323	PTFS 660	315	660	670	600	555	330	165	30	415	380	30	22	15	550,5	600	22

减震条

DAMPING RODS

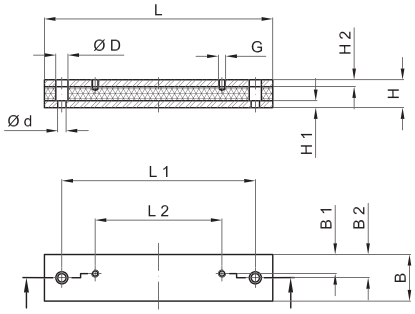

产品描述

- 降低噪音 / 隔绝振动
- 加工好的成品可以用于IEC电机 IMB35(MDS), NEMA 电机，以及PTFL钟罩脚架 (PTFL-DL) 和 PTFS 钟罩脚架 (PTFS-DS)
- 有库存
- 也可以根据要求提供长度和设计
- 材质: 橡胶 / 钢

PRODUCT DESCRIPTION

- Reduction of sound level / damping vibrations
- Finished for IEC motors IMB 35 (MDS), NEMA-motors, PTFL foot brackets (PTFL-DL) and PTFS foot brackets (PTFS-DS) respectively
- Available ex stock
- Special lengths and designs possible on request
- Material: Rubber (NR) / steel

用于电机IMB35的MDS系列减震条

SERIES MDS FOR ELECTRIC MOTORS FRAME IM B 35

部件号 PART NO.	减震条 DAMPING ROD	电机型号 FOR E-MOTOR	尺寸 / DIMENSIONS mm												肖氏硬度 SHORE° NR
			L	L_1	L_2	H	H_1	H_2	B	B_1	B_2	d	D	G	
4420	MDS 71	71	196	156	90	40	10	10	50	21	25	14	20	M6	55°
4421	MDS 80	80	180	156	100	40	10	10	50	22	25	14	20	M8	
4447	DSM 80 SO	80	176	146	100	40	10	10	50	22	25	14	20	M8	
4421	MDS 90 S	90 S	180	156	100	40	10	10	50	22	25	14	20	M8	
4423	MDS 90 L	90 L	240	205	125	40	10	10	50	24	25	14	20	M8	
4424	MDS 100 L	100 L	240	205	140	40	10	10	50	24	25	14	20	M10	
4425	MDS 112 M	112 M	240	205	140	40	10	10	50	20	25	14	20	M10	
4427	MDS 132 S	132 S	285	245	140	45	10	10	50	20	25	14	20	M10	
4427	MDS 132 M	132 M	285	245	178	45	10	10	50	20	25	14	20	M10	
4428	MDS 160 M	160 M	340	300	210	60	15	15	70	28	35	18	26	M12	
4429	MDS 160 L	160 L	416	370	254	60	15	15	70	28	35	18	26	M12	
4430	MDS 180 M	180 M	416	370	241	60	15	15	70	35	35	18	26	M12	
4431	MDS 180 L	180 L	446	400	279	60	15	15	70	35	35	18	26	M12	
4432	MDS 200 L	200 L	496	430	305	60	15	15	70	35	35	22	33	M16	
4433	MDS 225 S	225 S	496	430	286	60	15	15	70	35	35	22	33	M16	
4434	MDS 225 M	225 M	496	445	311	60	15	15	70	35	35	22	33	M16	
4435	MDS 250 M	250 M	496	445	349	60	15	15	100	50	50	22	33	M20	70°
4436	MDS 280 S	280 S	580	530	368	60	15	15	100	50	50	22	33	M20	
4436	MDS 280 M	280 M	580	530	419	60	15	15	100	50	50	22	33	M20	
4441	DSM 280 S-SO	280 S	614	570	368	60	15	15	100	50	50	22	33	M20	
4437	DSM 280 M-SO	280 M	614	570	419	60	15	15	100	50	50	22	33	M20	
4438	MDS 315 S	315 S	614	570	406	60	15	15	100	60	60	22	33	M24	
4443	MDS 315 M	315 M	614	570	457	60	15	15	100	60	60	22	33	M24	
4389	DSM 315 S	315 S	614	570	406	60	15	15	120	60	60	22	33	M24	
4389	DSM 315 M	315 M	614	570	457	60	15	15	120	60	60	22	33	M24	
4446	MDS 315 L	315 L	704	660	508	60	15	15	100	60	60	22	33	M24	
4446-1	DSM 315 L	315 L	704	660	508	60	15	15	120	60	60	22	33	M24	
4449	MDS 355 M	355 M	826	782	630	60	15	15	100	60	60	22	33	M24	

减震条

DAMPING RODS

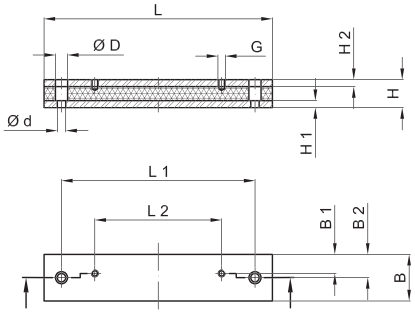

产品描述

- 降低噪音 / 隔绝振动
- 加工好的成品可以用于IEC电机IMB35(MDS), NEMA电机，以及PTFL钟罩脚架(PTFL-DL)和PTFS钟罩脚架(PTFS-DS)
- 有库存
- 也可以根据要求提供长度和设计
- 材质: 橡胶 / 钢

PRODUCT DESCRIPTION

- Reduction of sound level / damping vibrations
- Finished for IEC motors IMB 35 (MDS), NEMA-motors, PTFL foot brackets (PTFL- DL) and PTFS foot brackets (PTFS- DS) respectively
- Available ex stock
- Special length and designs possible on request
- Material: Rubber (NR) / steel

用于脚架PTFL的PTFL-DS系列减震条

SERIES PTFL-DS FOR FOOT BRACKETS PTFL

部件号 PART NO.	减震条 DAMPING ROD	电机型号 FOR E-MOTOR	尺寸 / DIMENSIONS mm												
			L	L_1	L_2	H	H_1	H_2	B	B_1	B_2	d	D	G	肖氏硬度 SHORE° NR
4498	PTFL-DS 160	PTFL 160	176	130	50	40	10	10	50	10	25	14	20	M8	55°
4483	PTFL-DS 200	PTFL 200	176	130	60	40	10	10	50	15	25	14	20	M10	
4484	PTFL-DS 250	PTFL 250	230	140	60	40	10	10	50	15	25	14	20	M12	
4485	PTFL-DS 300	PTFL 300	270	170	80	40	10	10	50	15	25	14	20	M12	
4486	PTFL-DS 350	PTFL 350	305	200	110	60	10	10	70	25	35	18	26	M16	

用于脚架PTFS的PTFS-DS系列减震条

SERIES PTFS-DS FOR FOOT BRACKETS PTFS

部件号 PART NO.	减震条 DAMPING ROD	电机型号 FOR E-MOTOR	尺寸 / DIMENSIONS mm												
			L	L_1	L_2	H	H_1	H_2	B	B_1	B_2	d	D	G	肖氏硬度 SHORE° NR
4490	PTFS-DS 200	PTFS 200	245	205	150	40	10	10	50	19	25	14	20	M10	55°
4491	PTFS-DS 250	PTFS 250	300	260	185	40	10	10	50	21	25	14	20	M12	
4492	PTFS-DS 300	PTFS 300	340	300	225	45	10	10	50	21	25	14	20	M12	
4493	PTFS-DS 350	PTFS 350	390	345	265	60	15	15	70	29	35	18	26	M16	
4494	PTFS-DS 400	PTFS 400	425	380	300	60	15	15	70	29	35	18	26	M16	
4495	PTFS-DS 450	PTFS 450	470	425	335	60	15	15	70	35	35	18	26	M16	
4496	PTFS-DS 550	PTFS 550	565	515	415	60	15	15	70	35	35	18	26	M16	
4497	PTFS-DS 660	PTFS 660	655	605	495	60	15	15	100	50	50	22	33	M20	70°

减震法兰

DAMPING FLANGES

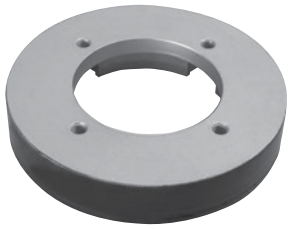

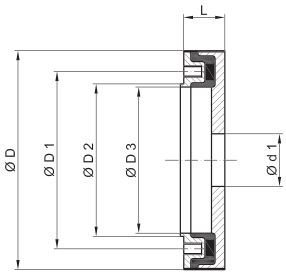

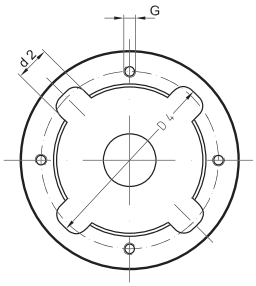

产品描述

- HBE减震法兰用于HBE钟罩和泵脚架与液压泵和电机之间的连接
- 减震法兰的两个铝制表面中间由模制橡胶(丁腈橡胶-NBR)将两个金属表面连接
- 所用材料耐矿物油并适合的工作温度可达+ 80°C, 瞬间最高温度可达+ 100°C
- 可以降低噪音达 8 dB (A)
- 有两种硬度可以选择
  S = 标准硬度　　H = 较高硬度

PRODUCT DESCRIPTION

- HBE damping flanges are applied in connection with HBE bellhousings and pump brackets between hydraulic pumps and E-motors
- They consist of two aluminium components, which are connected to each other by a mouled- on rubber coating (perbunan-NBR) without metallic contact
- The materials applied are restistant to mineral oils and are suitable for working temperatures up to + 80°C, + 100°C temporary
- The archieveable reduction of sound level amounts to 8 dB (A)
- For optimisation, two different shore hardnesses are available: S = standard　　H = hard

DF 200- 400

尺寸/DIMENSIONS mm									
尺寸/SIZE	D	D_1	D_2	D_3	D_4	d_{1min}	d_2	L	G
DF 200/../30/../1	142	102	90	85	120	32	25	30	M8 x 10
DF 250/16/35/../1	186	150	130	125	156	32	28	35	M10 x 15
DF 300/32/40/../1	222	175	147	140	190	33	55	40	M12 x 16
DF 350/63/45/../1	258	195	172	165	230	48	60	45	M12 x 16
DF 400/84/60/../1	365	248	212	200	335	120	45	60	M20 x 23

径向负荷

RADIAL WEIGH LOAD

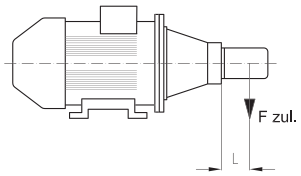

S = 标准硬度/standard
H = 较高硬度/hard

减震法兰 DAMPING FLANGE	DF 200/...		DF 250/16		DF 300/32		DF 350/63		DF 400/84	
	S	H	S	H	S	H	S	H	S	H
径向负荷点与重心的距离 L CENTROIDAL DISTANCE FOR RADIAL LOAD L mm	70		100		100		200		200	
60°C 时允许的负载 F (N) PERM. WEIGHT FORCE UP TO 60°C F (N)	300	400	1100	1300	1600	1900	1400	2000	3000	4000

$$F_{zul.} = \frac{(F(N) \times L)}{\text{tatsächl. SPA}}$$

DF-ZRP/1-2

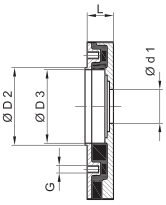

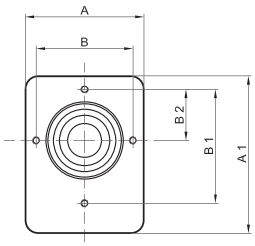

尺寸/DIMENSIONS mm/DIMENSIONS mm										
尺寸/SIZE	A	A_1	B	B_1	B_2	D_2	D_3	d_{1min}	G	L
DF ZRP/1-2	92	122	75	87,5	37,5	60	57	25	M8	20

矩形减震法兰与钟罩和泵脚架一起用于外啮合齿轮泵，满足静态或移动应用

Rectangular damping flange for external gear pumps of lines 1 and 2 for application in connection with bellhousings or pump brackets for steady or mobile applications

减震环

DAMPING RINGS

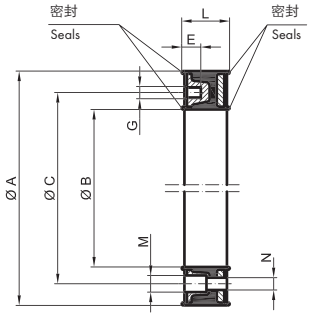

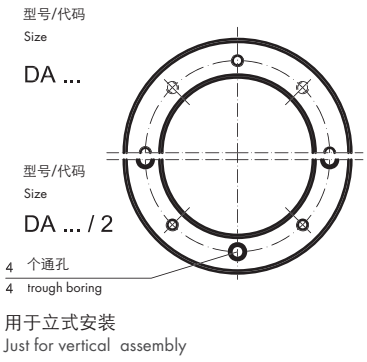

产品描述

- 用于钟罩和油箱之间的立式或卧式安装 减震环由表面经过处理的两个铝制金属环和模制丁腈橡胶构成
- 耐矿物油Ð最高温度可达+ 80° C
- 降噪可达 ca. 3-5 dB (A)
- 模制密封唇，不需要其它密封

PRODUCT DESCRIPTION

- For application between bellhousing and tank vertically or horizontally. Damping rings consist of two vulcanised Perbunan coated combined aluminium rings
- Application: Mineral oil up to max. + 80° C
- Noise reduction: approx 3-5 dB (A)
- Sealing lips moulded-on, no additional sealing necessary

部件号 PART NO.	IEC电机 代码 IEC MOTOR SIZE	产品代码 SIZE	尺寸/DIMENSIONS mm							
			A	B	C	G	E	L	M	N
4324	71	DA 160	160	111	130	M8	16	35	-	-
4325	80/90	DA 200	200	146	165	M10	20	43	-	-
4326	100/112	DA 250	250	191	215	M12	20	47	-	-
4327	132	DA 300	300	235	265	M12	20	53	-	-
4328	160/180	DA 350*	350	261	300	M16	24	63	-	-
4329	200	DA 400	400	308	350	M16	24	70	-	-
4330	225S/225M	DA 450	450	352	400	M16	32	60	-	-
4331	250M/280S/280M	DA 550*	550	452	500	M16	32	72	-	-
4332	315S/315M	DA 660	660	552	600	M20	32	65	-	-
4341	71	DA 160/2	160	111	130	M8	16	35	14,5	9
4340	80/90	DA 200/2	200	146	165	M10	20	43	16,5	11
4333	100/112	DA 250/2	250	191	215	M12	26	47	18,5	14
4334	132	DA 300/2	300	235	265	M12	26	53	18,5	14
4335	160/180	DA 350/2*	350	261	300	M16	24	63	24,5	18
4336	200	DA 400/2	400	308	350	M16	24	70	24,5	18
4337	225S/225M	DA 450/2	450	352	400	M16	32	60	26	18
4338	250M/280S/280M	DA550/2*	550	452	500	M16	32	72	26	18
4339	315S/315M	DA 660/2	660	552	600	M20	32	65	33	22

* 失效安全设计

*Fail safe design

安装法兰

MOUNTING FLANGES

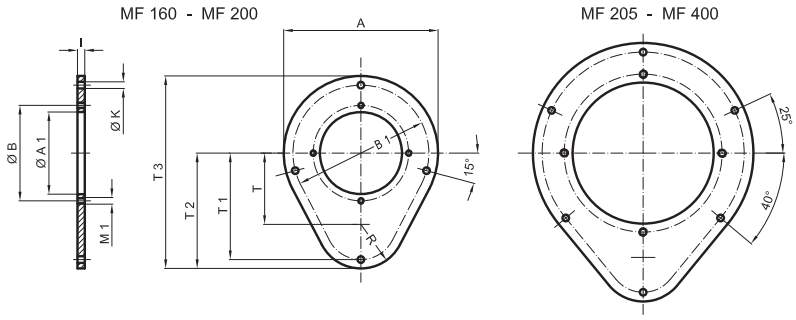

产品描述

- 安装法兰可以方便动力单元包括管线的拆装，无须拆清洗端盖
- 管线可以穿过安装法兰
- 材质 ST 37
- 软木橡胶制成的垫圈可以作为附件提供（可参考介绍 “垫圈”）

PRODUKT DESCRIPTION

- Mounting flanges enable the assemby / disassembly of the power unit inclusive pressure line without dismounting of the cleaning cover
- Pressure lines are led through the mounting flange
- Material: ST 37
- Gaskets made of GK (rubber cork) available as accessory (see data sheet “gaskets”)

部件号 PART NO.	产品代码 SIZE	尺寸 / DIMENSIONS mm												油箱和安装法兰之间的垫圈 (2.5 mm厚) GASKET BETWEEN OIL TANK AND MOUNTING FLANGE (2.5 mm thick)	钟罩和安装法兰之间的垫圈 (2.5 mm厚) GASKET BETWEEN BELLHOUSING AND MOUNTING FLANGE (2.5 mm thick)
		A	A1	B	B1	K	M_1	R	T	T_1	T_2	T_3	I		
4499	MF 160	210	112	130	185	9	M8	60	97	145	157	262	7	DMF 160 GK	D 160 GK
4500	MF 200	250	147	165	225	9	M10	60	142	190	202	327	7	DMF 200 GK	D 200 GK
4501	MF 250	300	192	215	275	9	M12	60	142	190	202	352	8	DMF 250 GK	D 250 GK
4502	MF 300	360	236	265	330	14	M12	90	150	225	240	420	8	DMF 300 GK	D 300 GK
4503	MF 350	410	262	300	380	14	M16	110	160	255	270	475	10	DMF 350 GK	D 350 GK
4504	MF 400	480	304	350	440	18	M16	150	175	305	325	565	10	DMF 400 GK	D 400 GK

HBE 保留有随时更新技术数据的权利

HBE reserves the right to modify technical data at any time.

用于钟罩，安装法兰和齿轮泵的垫圈

GASKETS FOR BELLHOUSINGS, MOUNTING PLATES AND GEAR PUMPS

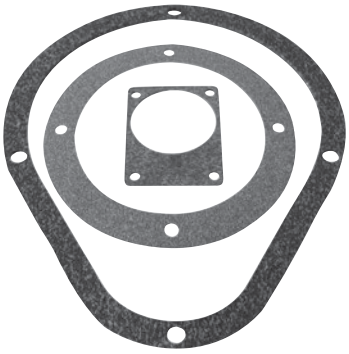

产品描述

- D和DMF系列垫圈，材质：软木橡胶
- PD系列垫圈，材质：纸基
- D系列垫圈应用于钟罩和清洗端盖，也可以用于钟罩和MF系列安装法兰之间
- DMF系列垫圈应用于MF系列安装法兰和清洗端盖之间
- PD系列垫圈应用于泵和钟罩之间
- 所有垫圈都有库存

PRODUCT DESCRIPTION

- D and DMF gaskets, material: rubber cork
- PD gaskets, material: paperboard
- D gaskets are applied between bellhousing and cleaning cover and also between bellhousing and MF mounting flange
- DMF gaskets are applied between MF mounting flange and cleaning cover
- PD gaskets are applied between pump and bellhousing
- All gaskets available ex stock

系列 „D“ SERIES “D“

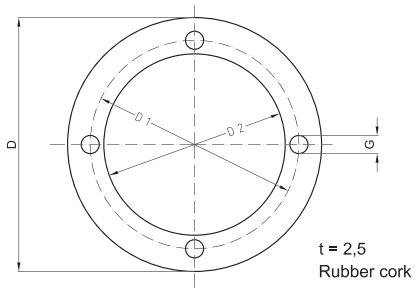

Gk = 软木橡胶 / Rubber cork

部件号 PART NO.	产品代码 SIZE	尺寸 / DIMENSIONS mm			
		D	D_1	D_2	G
4359	D 140 GK	140	115	100	10 (4x)
4360	D 160 GK	160	130	112	10 (4x)
4361	D 200 GK	200	165	147	12 (4x)
4362	D 250 GK	250	215	193	14 (4x)
4363	D 300 GK	300	265	245	14 (4x)
4364	D 350 GK	350	300	270	19 (4x)
4365	D 400 GK	400	350	303	19 (4x)
4366	D 450 GK	450	400	353	19 (8x)
4367	D 500 GK	550	500	453	19 (8x)
4368	D 660 GK	660	600	554	24 (8x)

系列 „DMF“ SERIES “DMF“

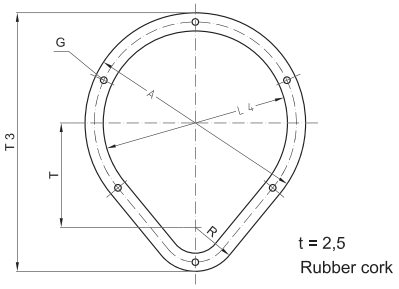

Gk = 软木橡胶 / Rubber cork

部件号 PART NO.	产品代码 SIZE	尺寸 / DIMENSIONS mm					
		T_3	T	R	A	L_4	G
4509	DMF 160 GK	262	97	60	210	160	10 (4x)
4510	DMF 200 GK	325	140	60	250	200	10 (4x)
4511	DMF 250 GK	350	140	60	300	250	10(6x)
4512	DMF 300 GK	420	150	90	360	300	14 (6x)
4513	DMF 350 GK	475	160	110	410	350	19 (6x)
4514	DMF 400 GK	565	175	150	480	400	19 (6x)

系列 „PD“ SERIES “PD“

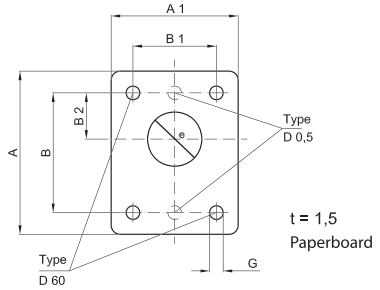

P = 纸基 / Paperboard

部件号 PART NO.	产品代码 SIZE	尺寸 / DIMENSIONS mm						
		A	A_1	B	B_1	B_2	D	G
4370	PD 0,5 P	90	69	66	-	25,5	24	7,5 (2x)
4371	PD 10 P	90	69	72	52,4	26,2	27	7,5 (4x)
4371	PD 11 P	90	69	73	56	24,5	32	7,5 (4x)
4373	PD 20 P	118	88	96	71,5	32,5	38	9,5 (4x)
4374	PD 25 P	170	120	128	98,5	43	ø 52	9,5 (4x)
4374	PD 28 P	170	120	137	98,4	45	ø 52	12 (4x)
4376	PD 35 P	180	158	149,5	114,3	49,5	62	12 (4x)
4377	PD 40 P	230	175	196	142,8	65	65	15 (4x)
4377	PD 45 P	230	175	188	143	64,3	65	15 (4x)
4379	PD 60 P	75	60	40	40	10,3	34	9,5 (4x)
4380	PD 70 P	121	91	100	72	34,5	82	9,5 (4x)
4381	PD 80 P	165	122	145	102	48	107	12 (4x)

产品

DELIVERY PROGRAMME

铝制油箱 Oil tanks made of aluminium	
清洗端盖和附件 液位计和温度计 Cleaning covers and further tank accessories Level- and temperature indicators	
油箱加热器 Tank heaters	
钟罩和附件 Bellhousings and accessories	
带冷却器的钟罩 各类换热器 DOC® 钎焊板式换热器 Bellhousing with oil-cooler Heat exchangers DOC® Brazed plate heat exchanger	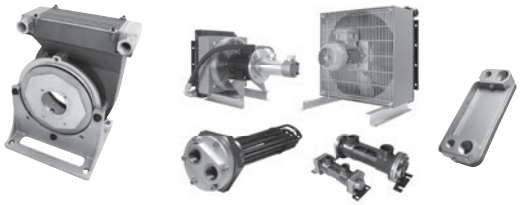
SOFTEX® 弹性 和 无背隙联轴器 SOFTEX® elastic and no backlash shaft couplings	
STAREX® 齿面联轴器 STAREX® flexible couplings	
内燃机联轴器 Diesel engine couplings	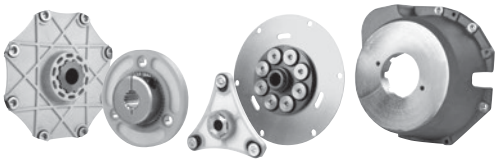

HBE fluid equipment

上海新洁流体科技有限公司
联系人：袁建红 经理
电话：13918089112
邮箱：yuanjianhong@vip.sina.com

TÜV NORD DIN EN ISO 9001

e.holding
FLUID TECHNOLOGY GROUP
www.e-holding.de

10/14 www.plakart.de