HBE hydraulic components

Solutions for Fluid Technology

换热器

HEAT EXCHANGERS

换热器

HEAT EXCHANGERS

EKM系列管束式换热器

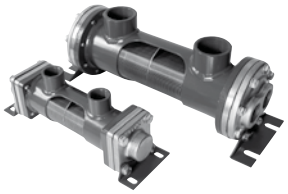

带铝鳍的管束式换热器, 和标准管式换热器相比, 冷却面积可以提高到4倍. 冷却功率可达 1000 kW. 非常耐压 – 最大可达 35 bar. 可拆卸端帽方便水管的清洗. 还可选内部旁通阀(专利). 可选海水版.

SERIES EKM TUBE BUNDLE OIL COOLER

Tube bundle with aluminium fins, providing up to 4-times greater cooling surface compared to a standard shell and tube cooler. Cooling capacity up to 1,000 kW. Extremely pressure resistant – max. 35 bar. Removeable end caps for easy cleaning of the water pipes. Optionally available with internal bypass valve (patented). Option: seawater version.

UKC-G系列油/水换热器

高性能的管束式换热器, 可以直接通过已有的螺纹孔安装在油箱或齿轮箱里. 通过选择铜镍管, 经济而且节省空间, 冷却表面积可达 0.15 – 0.43 平方米, 管侧流量最大可达 25升/分钟.

SERIES UKC-G OIL/WATER HEAT EXCHANGER

High performance tube bundle cooler for direct mounting into tank or gear box by using existing threaded ports for heaters. Inexpensive and space saving solution incl. cooling surfaces of 0,15 – 0,43 m^2 and tube side flow rate of max. 25 l/min by choosing copper-nickel tubes.

LKI系列油换热器

工业用途的空气/油换热器. 有 10 个不同规格. 整体构造(最大工作压力 16 bar). 1 通路和 2 通路. 可以选 SAE 法兰. 也可选海洋近岸版.

SERIES LKI OIL AIR COOLER

Oil air cooler for industrial use. Available in 10 different sizes. Block construction (max. operating pressure 16 bar). 1-way and 2-way. Available with SAE flange. Off-Shore version optional.

TFS系列空气油换热器

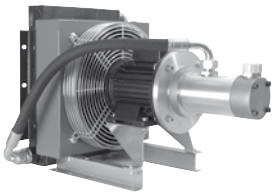

紧凑型旁路冷却单元. 该冷却单元由电机, 泵组合和空气油换热器组成, 独立于主机. 泵的法兰直接连接电机. 由于采用内置螺杆泵, 噪音很低. 可以采用各种安装方式. 有3种规格可选.

SERIES TFS / A OIL AIR COOLER

Compact bypass-flow cooling unit. Combination of motor pump station and oil air cooler in a single unit that operates independently of the actual unit. Pump flange is connected directly to the motor. Extremely low-noise due to internal screw pump. Various installation positions possible. Available in three different sizes.

工业用油/水热交换器

OIL / WATER HEAT EXCHANGERS FOR INDUSTRIAL USE

系列 EKM/SKM

SERIES EKM/SKM

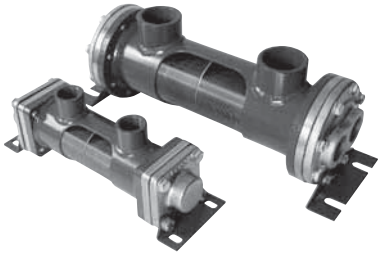

产品描述

EKM/SKM系列是管束式热交换器的发展型， 适合很多工业应用. 这个系列具有更大的冷却表面, 热交换功率可达 1000 kW. 管束间是通过铝鳍实现金属-金属接触. EKM/SKM系列热交换器的冷却表面积可达 0.43 平方米到 56 平方米. EKM/SKM 系列由 43 个基本单元构成, 可以实现单通路, 双通路, 4 通路.

PRODUCT DESCRIPTION

The EKM/SKM series is a consistent development of a tube bundle heat exchanger for a wide range of industrial applications. This range is particularly effective due to the additional cooling area, and offers a heat exchange performance of 1,000 kW. This is archieved by aluminium fins, which are pushed over the tube bundle with metal-to-metal contact. The EKM/SKM range of heat exchangers have a cooling surface of 0.43 m^2 to 56 m^2. The EKM/SKM series is constructed of 43 basic units, which are available as single, double and four pass versions.

产品特点

- 铝鳍和铜管(标准)可以确保最大程度的换热效果
- 油路接口大可以降低流动阻力
- 散热能力可达 1000 kW
- 油流量可达 1500 升/分钟
- 端盖可拆卸便于管路的清洗
- 法兰允许热交换器 90°转角
- 可选内置旁通检测阀(专利)
- 选用高品质的材料
- 最大压力: 油 35 bar / 水 10 bar
- 全系列附件
- 保有库存

PRODUCT FEATURES

- Aluminium fins and copper tubes (standard) ensure maximum levels of heat exchange
- Large oil connectors for minimum flow resistance
- Heat dissipation up to 1,000 kW
- Oil flow rates of up to 1.500 l/min
- Removable end caps for easy cleaning of the tubes
- Flanges allow a 90° rotation of the heat exchanger
- Optionally available with internal bypass check valve (patented)
- High-quality materials
- Max. pressure: oil 35 bar/water 10 bar
- Full range of accessories available
- Delivery ex-stock

备选

- 海水版
- 海洋应用的认证文件
- 应用于压缩空气
- 应用于水 – 水
- 不锈钢版 或 化学镀镍

OPTION

- See water version
- Certification for marine applications
- Compressed air application
- Water-water application
- Stainless steel version or chemically nickel plated

材质

MATERIALS

	标准 / STANDARD
外壳, 安装支架, 挡板 , 管束/ SHELL, MOUNTING BRACKET, BAFFELS, TUBESHEET	钢 / Steel
端板 / END PLATES	钢 / Steel
散热鳍, 型号规格版 COOLING FINS, TYPE SPECIFICATION PLATE	铝 / Aluminium
管束 / TUBES	铜, 镀镍 / Copper, Nickel
端盖 / END CAPS	铸铁 / Cast iron
垫圈 / GASKETS	丁腈橡胶, 纤维 / Nitrile rubber, cellulose fibre

工业用油/水热交换器

OIL / WATER HEAT EXCHANGERS FOR INDUSTRIAL USE

单通路型 „O“/ 1 PASS TYPE „O“

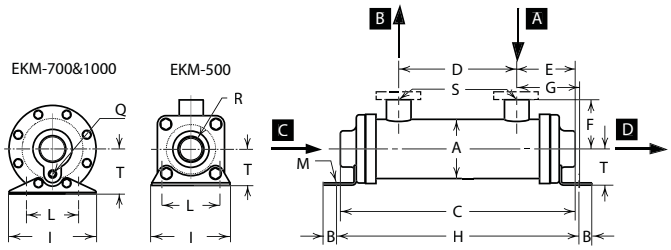

2通路型“T“/ 2 PASS TYPE „T“

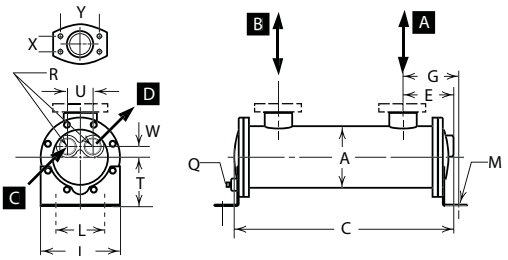

A - 需冷却介质
- Medium to be cooled

B - 冷却的介质
- Cooled Medium

C - 冷却水入口
- Cooling water inlet

D - 冷却水出口
- Cooling water outlet

EKM 500 – 1000系列尺寸

DIMENSIONS EKM 500 – 1000

规格 SIZE	C	H	D	E	G	L	U	A	S	R	Q	M	T	F	重量 WEIGHT kg
EKM-505-0	187	189	55	66	66	62,5	-	65	G 3/4"	G 3/4"	-	9	41	53	3,15
EKM-505-T				83	67		28			G 3/8"					
EKM-508-0	263	265	97	82	83		-			G 3/4"				57	3,60
EKM-508-T	265			83	85		28			G 3/8"					
EKM-510-0	314	316	148	82	83		-			G 3/4"					3,45
EKM-510-T				83	85		28			G 3/8"					
EKM-512-0	365	367	199	82	83		-			G 3/4"					4,05
EKM-512-T				83	85		28			G 3/8"					
EKM-514-0	416	418	250	82	83		-			G 3/4"					4,50
EKM-514-T				83	85		28			G 3/8"					
EKM-518-0	517	519	351	82	83		-			G 3/4"					5,10
EKM-518-T				83	85		28			G 3/8"					
EKM-524-0	670	672	504	82	83		-			G 3/4"					6,00
EKM-524-T	672			83	85		28			G 3/8"					
EKM-536-0	975	976	809	82	83		-			G 3/4"					7,80
EKM-536-T	976			83	85		28			G 3/8"					
EKM-708-0	283	272	76	103	103	76	-	90	G 11/2"	G 11/4"	G 1/4"	11	66	73	7,30
EKM-708-T	258			91	95		41			G 1"					
EKM-712-0	385	373	177	103	103		-			G 11/4"	G 1/4"				8,40
EKM-712-T	360			91	95		41			G 1"					
EKM-714-0	435	424	228	103	103		-			G 11/4"	G 1/4"				8,80
EKM-714-T	411			91	95		41			G 1"					
EKM-718-0	537	526	330	103	103		-			G 11/4"	G 1/4"				10,20
EKM-718-T	513			91	95		41			G 1"					
EKM-724-0	689	678	482	103	103		-			G 11/4"	G 1/4"				11,60
EKM-724-T	665			91	95		41			G 1"					
EKM-736-0	994	983	787	103	103		-			G 11/4"	G 1/4"				15,50
EKM-736-T	995			91	95		41			G 1"					
EKM-1012-0	389	392	157	116	116	102	-	128	G 11/2"	G 11/2"	G 1/4"	11	102	92	15,40
EKM-1012-T	369			113	110		60			G 11/4"					
EKM-1014-0	440	443	207	116	116		-			G 11/2"					16,90
EKM-1014-T	420			113	110		60			G 11/4"					
EKM-1018-0	541	544	309	116	116		-			G 11/2"					19,80
EKM-1018-T	522			113	110		60			G 11/4"					
EKM-1024-0	694	697	461	116	116		-			G 11/2"					21,80
EKM-1024-T	674			113	110		60			G 11/4"					
EKM-1036-0	999	1002	766	116	116		-			G 11/2"					30,50
EKM-1036-T	979			113	110		60			G 11/4"					
EKM-1048-0	1303	1306	1071	116	166		-			G 11/2"					39,80
EKM-1048-T	1284			113	110		60			G 11/4"					

单通路型 „O“/ 1 PASS TYPE „O“

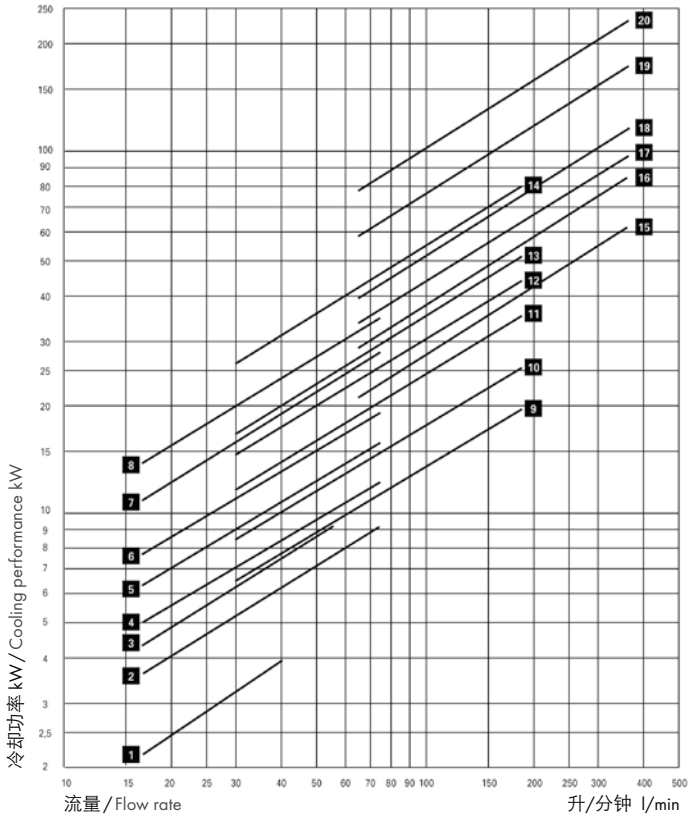

1	EKM-505-O	11	EKM-714-O
2	EKM-508-O	12	EKM-718-O
3	EKM-510-O	13	EKM-724-O
4	EKM-512-O	14	EKM-736-O
5	EKM-514-O	15	EKM-1012-O
6	EKM-518-O	16	EKM-1014-O
7	EKM-524-O	17	EKM-1018-O
8	EKM-536-O	18	EKM-1024-O
9	EKM-708-O	19	EKM-1036-O
10	EKM-712-O	20	EKM-1048-O

图中所示性能数据取决于流量，
请咨询厂家.

The performance data shown in the diagram are limited by the flow rate and may be exceeded after consultation with the manufacturer.

2通路型“T“/ 2 PASS TYPE „T“

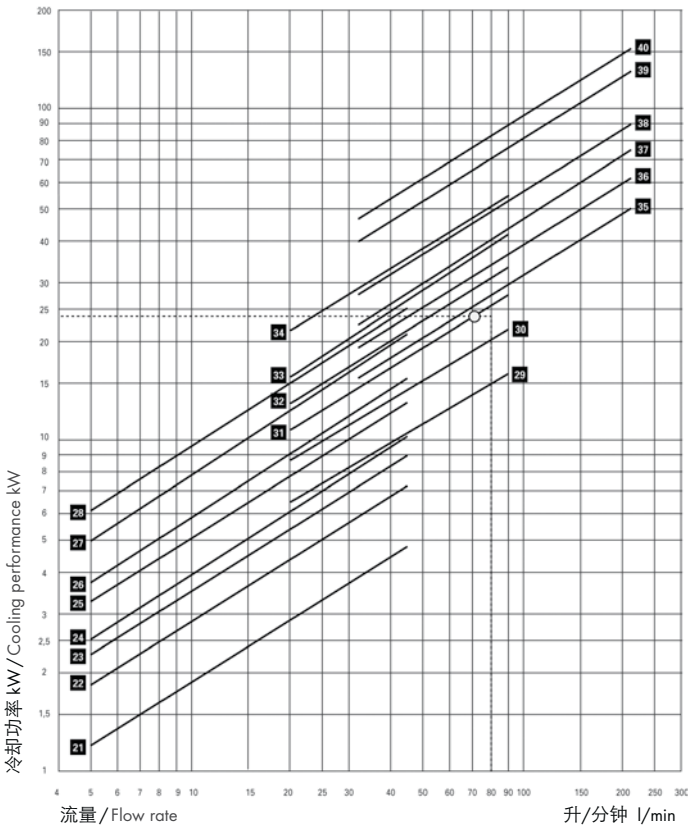

21	EKM-505-T	31	EKM-714-T
22	EKM-508-T	32	EKM-718-T
23	EKM-510-T	33	EKM-724-T
24	EKM-512-T	34	EKM-736-T
25	EKM-514-T	35	EKM-1012-T
26	EKM-518-T	36	EKM-1014-T
27	EKM-524-T	37	EKM-1018-T
28	EKM-536-T	38	EKM-1024-T
29	EKM-708-T	39	EKM-1036-T
30	EKM-712-T	40	EKM-1048-T

SKM1200系列尺寸

UNIT DIMENSIONS SKM 1200

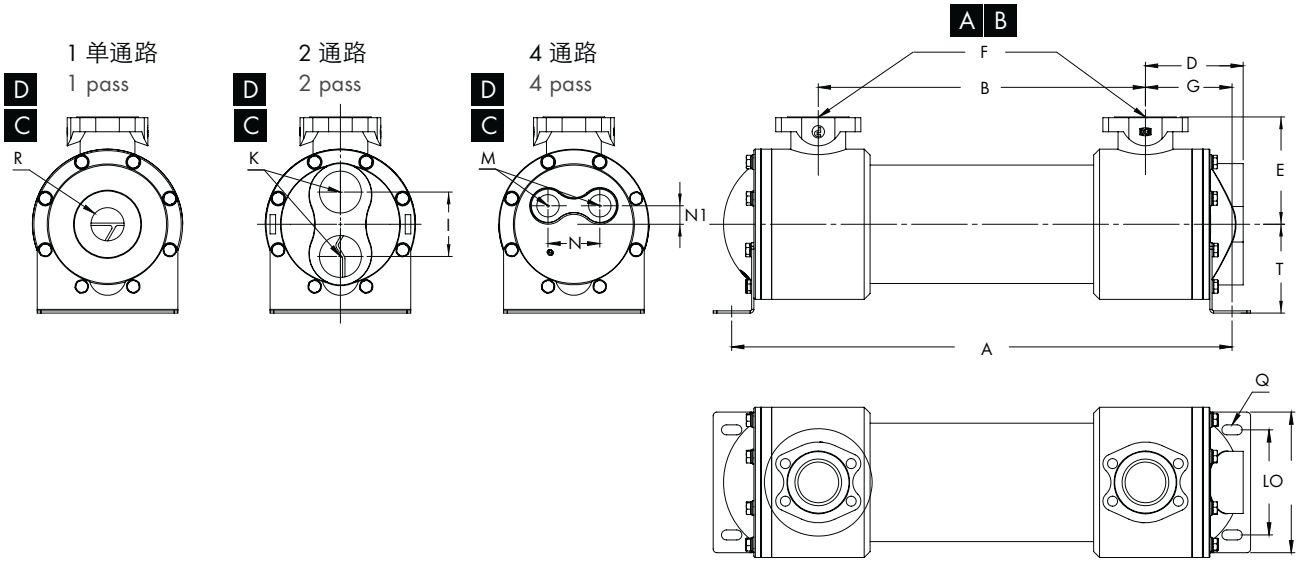

A - 需冷却介质
- Medium to be cooled

B - 冷却的介质
- Cooled Medium

C - 冷却水入口
- Cooling water inlet

D - 冷却水出口
- Cooling water outlet

SKM 系列尺寸

DIMENSIONS SKM

规格 SIZE	A	B	D	E	G	F	T	R	I	K	L	M	N	N1	O	Q	m²
SKM-1218	524	290	132	145	117	SAE 2 1/2″	120	G 2″	87+80	G 3/4″	142	G 1″	70	25	190	ø 13 x 28	6,00
SKM-1224	676	442	132	145	117	SAE 2 1/2″	120	G 2″	87+80	G 3/8″	142	G 1″	70	25	190	ø 13 x 28	8,06
SKM-1230	829	595	132	145	117	SAE 2 1/2″	120	G 2″	87+80	G 3/4″	142	G 1″	70	25	190	ø 13 x 28	10,19
SKM-1236	981	747	132	145	117	SAE 2 1/2″	120	G 2″	87+80	G 3/8″	142	G 1″	70	25	190	ø 13 x 28	12,25
SKM-1242	1134	900	132	145	117	SAE 2 1/2″	120	G 2″	87+80	G 3/4″	142	G 1″	70	25	190	ø 13 x 28	14,38
SKM-1248	1286	1052	132	145	117	SAE 2 1/2″	120	G 2″	87+80	G 3/8″	142	G 1″	70	25	190	ø 13 x 28	16,35
SKM-1254	1438	1204	132	145	117	SAE 2 1/2″	120	G 2″	87+80	G 3/4″	142	G 1″	70	25	190	ø 13 x 28	18,48
SKM-1260	1591	1357	132	145	117	SAE 2 1/2″	120	G 2″	87+80	G 3/8″	142	G 1″	70	25	190	ø 13 x 28	20,52
SKM-1266	1743	1509	132	145	117	SAE 2 1/2″	120	G 2″	87+80	G 3/4″	142	G 1″	70	25	190	ø 13 x 28	22,63
SKM-1272	1895	1661	132	145	117	SAE 2 1/2″	120	G 2″	87+80	G 3/8″	142	G 1″	70	25	190	ø 13 x 28	24,74
SKM-1278	2048	1814	132	145	117	SAE 2 1/2″	120	G 2″	87+80	G 3/4″	142	G 1″	70	25	190	ø 13 x 28	26,88
SKM-1284	2200	1966	132	145	117	SAE 2 1/2″	120	G 2″	87+80	G 3/8″	142	G 1″	70	25	190	ø 13 x 28	28,99

规格 SIZE	U	V	W	X	Z
SAE 1″	70	52,4	55,0	26,2	M10
SAE 1 1/4″	79	58,7	68,0	30,2	M10
SAE 1 1/2″	93	69,9	78,0	35,7	M12
SAE 2″	102	77,8	90,0	42,9	M12
SAE 2 1/2″	114	88,9	105,0	50,8	M12
SAE 3″	135	106,4	130,6	62,0	M16

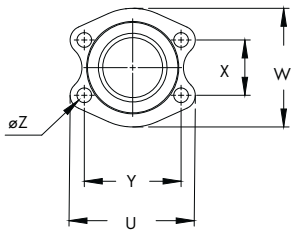

2 通路 / 2 PASS

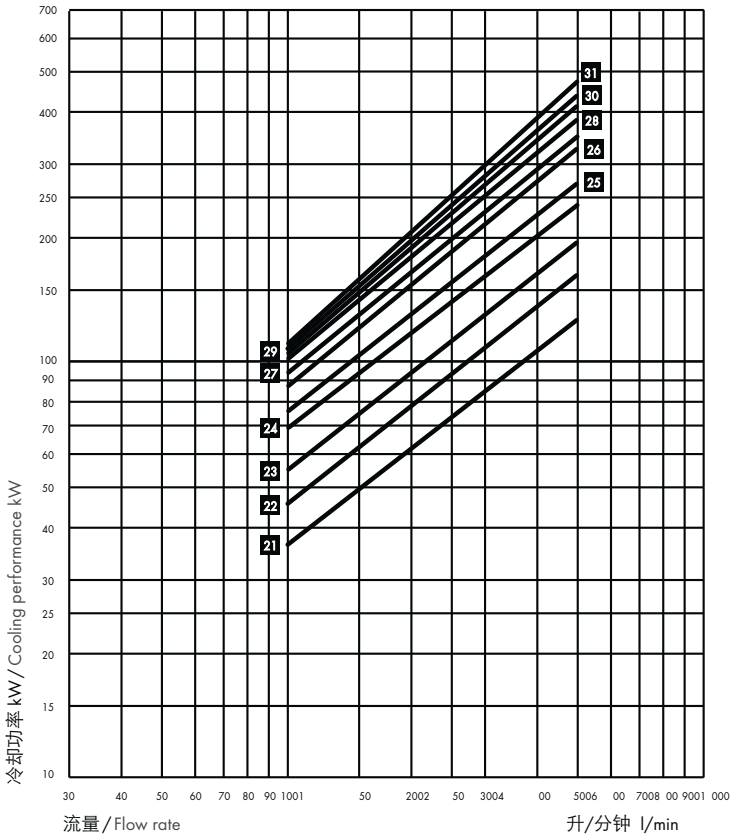

- 21 SKM-1218-T
- 22 SKM-1224-T
- 23 SKM-1230-T
- 24 SKM-1236-T
- 25 SKM-1242-T
- 26 SKM-1248-T
- 27 SKM-1254-T
- 28 SKM-1260-T
- 29 SKM-1266-T
- 30 SKM-1272-T
- 31 SKM-1278-T
- 32 SKM-1284-T

图中所示的性能数据会受流量的限制，请咨询厂家. 性能数据是基于水入口温度 25°C 和油出口温度 50°C, 油的粘度 20.6 cSt.

The performance data shown in the diagram are limited by the flow rate, and may be exceeded after consultation with the manufacturer. The performance data shown is based on a water inlet temperature of 25°C and an oil outlet temperature of 50°C, together with an oil viscosity of 20.6 cSt.

EKM 1700 系列尺寸

UNIT DIMENSIONS EKM 1700

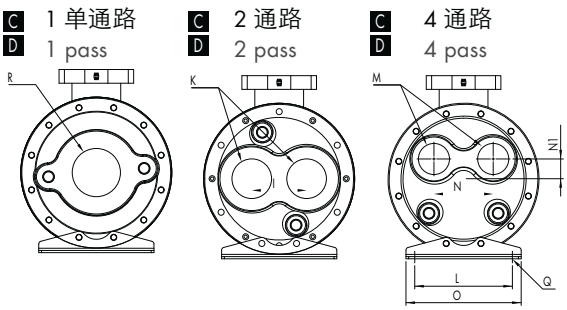

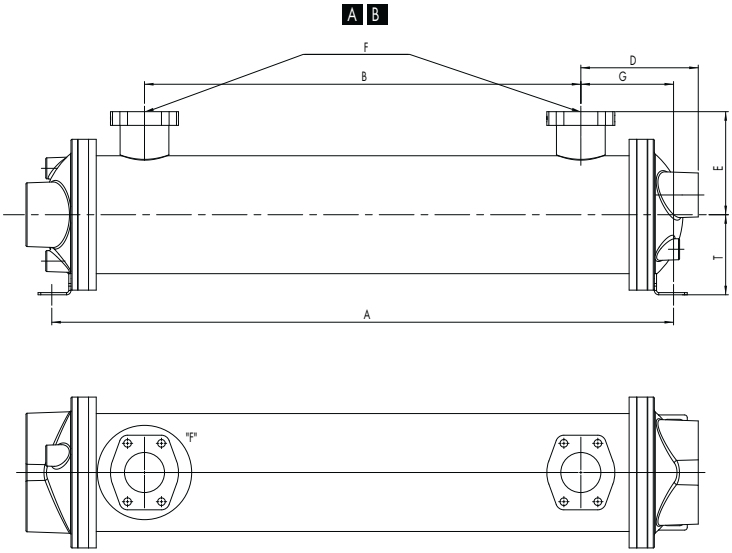

A - 需冷却介质
- Medium to be cooled

B - 冷却的介质
- Cooled Medium

C - 冷却水入口
- Cooling water inlet

D - 冷却水出口
- Cooling water outlet

EKM 系列尺寸

DIMENSIONS EKM

规格 SIZE	A	B	D	E	G	F	T	R	I	K	L	M	N	N1	O	Q	m²
EKM-1724	706	368	214	188	169	SAE 3″	146	G 3″	100	G 2 1/2″	178	G 2″	108	36	210	ø 16 x 38	14,77
EKM-1730	859	521	214	188	169	SAE 3″	146	G 3″	100	G 2 1/2″	178	G 2″	108	36	210	ø 16 x 38	18,85
EKM-1736	1011	673	214	188	169	SAE 3″	146	G 3″	100	G 2 1/2″	178	G 2″	108	36	210	ø 16 x 38	22,65
EKM-1742	1164	826	214	188	169	SAE 3″	146	G 3″	100	G 2 1/2″	178	G 2″	108	36	210	ø 16 x 38	26,70
EKM-1748	1316	978	214	188	169	SAE 3″	146	G 3″	100	G 2 1/2″	178	G 2″	108	36	210	ø 16 x 38	30,52
EKM-1754	1468	1130	214	188	169	SAE 3″	146	G 3″	100	G 2 1/2″	178	G 2″	108	36	210	ø 16 x 38	34,55
EKM-1760	1621	1283	214	188	169	SAE 3″	146	G 3″	100	G 2 1/2″	178	G 2″	108	36	210	ø 16 x 38	38,40
EKM-1766	1773	1435	214	188	169	SAE 3″	146	G 3″	100	G 2 1/2″	178	G 2″	108	36	210	ø 16 x 38	42,25
EKM-1772	1936	1587	214	188	169	SAE 3″	146	G 3″	100	G 2 1/2″	178	G 2″	108	36	210	ø 16 x 38	46,28
EKM-1778	2078	1740	214	188	169	SAE 3″	146	G 3″	100	G 2 1/2″	178	G 2″	108	36	210	ø 16 x 38	50,12
EKM-1784	2230	1892	214	188	169	SAE 3″	146	G 3″	100	G 2 1/2″	178	G 2″	108	36	210	ø 16 x 38	54,15

规格 SIZE	U	V	W	X	Z
SAE 1″	70	52,4	55,0	26,2	M10
SAE 1 1/4″	79	58,7	68,0	30,2	M10
SAE 1 1/2″	93	69,9	78,0	35,7	M12
SAE 2″	102	77,8	90,0	42,9	M12
SAE 2 1/2″	114	88,9	105,0	50,8	M12
SAE 3″	135	106,4	130,6	62,0	M16

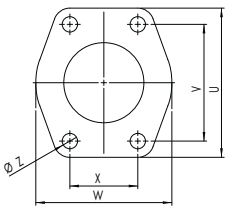

2 通路 / 2 PASS

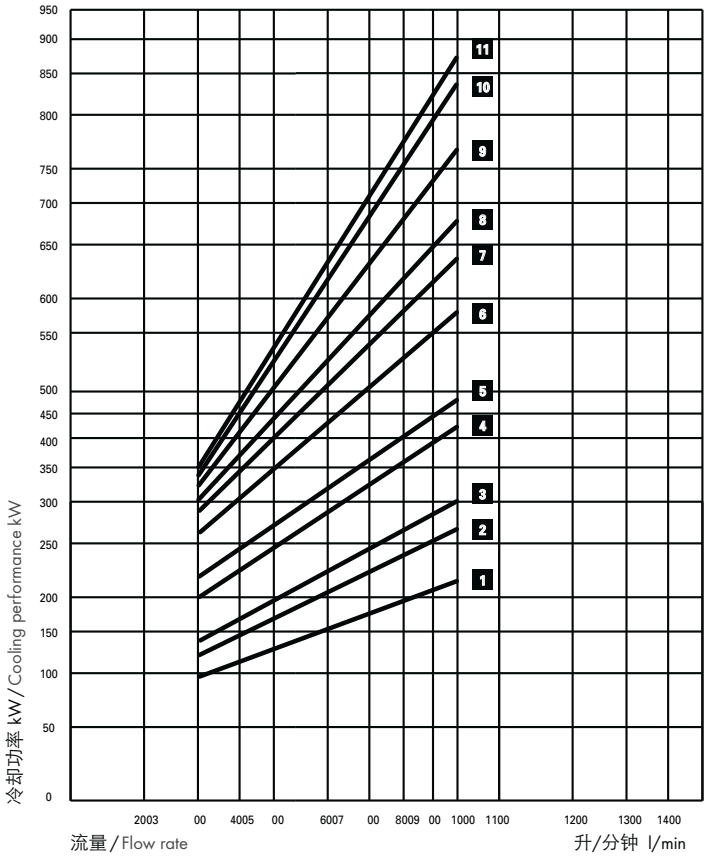

1 EKM-1718-T-CN
2 EKM-1724-T-CN
3 EKM-1730-T-CN
4 EKM-1736-T-CN
5 EKM-1742-T-CN
6 EKM-1748-T-CN
7 EKM-1754-T-CN
8 EKM-1760-T-CN
9 EKM-1766-T-CN
10 EKM-1778-T-CN
11 EKM-1784-T-CN

图中所示的性能数据会受流量的限制，请咨询厂家. 性能数据是基于水入口温度 25°C 和油出口温度 50°C, 油的粘度 20.6 cSt.

The performance data shown in the diagram are limited by the flow rate, and may be exceeded after consultation with the manufacturer. The performance data shown is based on a water inlet temperature of 25°C and an oil outlet temperature of 50°C, together with an oil viscosity of 20.6 cSt.

EKM/SKM 系列示例计算

对于不同的油出口温度, 水入口温度和粘度, 需要进行以下计算:

这里

散热量 (AW)	= 17 kW
油流量 (V)	= 80 l/min
油入口温度 (t 油出口)	= 45°C
水入口温度 (t 进水)	= 25°C
油品	= ISO 68
有效散热量	= kW eff.

1. 粘度修正系数计算如下:
温差 T (°C) =

$$\frac{\text{AW (kW)} \times 34{,}1}{\text{Q (l/mm)}} = 7{,}2$$

因此, 平均油温 (°C) =

$$\frac{t_{\text{Öl aus}} + \Delta t + t_{\text{Öl aus}}}{2} = 49°\ \text{C}$$

2. 根据 ISO68 号油的数据:
49°C 时的粘度 = 38 cSt
3. 根据粘度修正表„A“:
38 cSt = 1,11

AW eff. =

$$\frac{\text{AW (kW)} \times 25 \times \text{粘度 (cST) 表. A}}{t_{\text{油出口}}(°\text{C}) - t_{\text{进水}}(°\text{C})}$$

$$= \frac{17 \times 25 \times 1{,}11}{20} = 23{,}6\ \text{kW}$$

依据 2:1 油/水性能图, 当油流量 80 升/分钟 和 23.6 kW 时, 结果为:
冷却器 No. 31 = EKM- 714 -T -CN

冷却器的选择

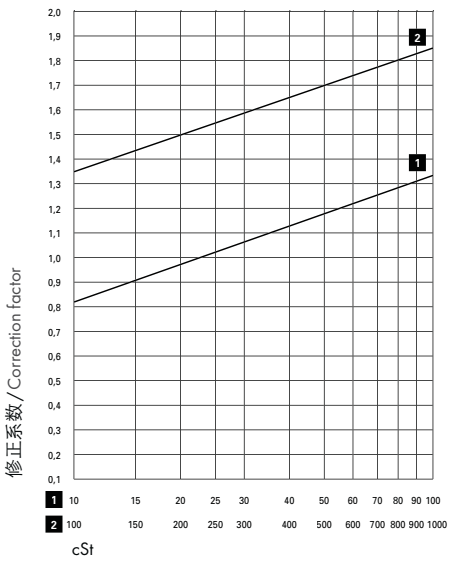

EXAMPLE CALCULATION EKM/SKM

For deviating oil outlet temperatures, water inlet temperatures and viscosities, the calculation has to be made as follows:

WHERE

Heat to be dissipated (AW)	= 17 kW
Oil flow (V)	= 80 l/mn.
Oil outlet temp. (t oil out)	= 45°C
Water inlet temp. (t water in)	= 25°C
Oil type	= ISO 68
Effective heat to be dissipated	= kW eff.

1. The viscosity correction factor is calculated as follows:
Temperature difference ΔT (°C) =

$$\frac{\text{AW (kW)} \times 34{,}1}{\text{Q (l/mm)}} = 7{,}2$$

Average oil temp. therefore (°C) =

$$\frac{t_{\text{oil out}} + \Delta t + t_{\text{oil out}}}{2} = 49°\ \text{C}$$

2. From oil manufacturer's data for ISO 68:
Viscosity at 49°C = 38 cSt
3. From viscosity correction table „A“:
38 cSt = 1,11

AW eff. =

$$\frac{\text{AW (kW)} \times 25 \times \text{viscosity (cST) Tab. A}}{t_{\text{oil out}}(°\text{C}) - t_{\text{water in}}(°\text{C})}$$

$$= \frac{17 \times 25 \times 1{,}11}{20} = 23{,}6\ \text{kW}$$

From oil/water 2:1 performance diagram at an oil flow of 80 l/min and 23.6 kW, the outcome is:
Cooler no. 31 = EKM- 714 -T -CN

CHOICE OF COOLER

图中所示的性能数据是基于水入口温度 25°C 和油出口温度 50°C, 油的粘度 20.6 cSt. 对于不同的粘度, 可依据以下性能曲线读出修正系数 „A“.

The performance data shown is based on a water inlet temperature of 25°C and an oil outlet temperature of 50°C, together with an oil viscosity of 20.6 cSt. For different viscosities, the correction factor „A“ can be read off from the performance curve below.

EKM/SKM系列订货代码

ORDERING CODE EKM/SKM

SS - EKM - 1036 - 6 - O - CN - R - W - SW - 02 - G 1 1/2“

G 1 1/2“
= 油连接
= Oil connections

02系列/ Serie 02
优化的端帽
optimized end caps

SW = 海水 /Seawater
SWBZ = 海水端帽炮铜+锌阳极
Seawater
Endcap gunmetal + zinc anode
SS = 端帽不锈钢 /End cap stainless steel 1.4301

管板 **/ Tube sheet**
W = 海军铜 /naval brass
SS = 不锈钢 /Stainless steel 1.4301

R = 旁通阀 （部分开）/Bypass valve (partly opened)

RS = 旁通阀 （全开）/Bypass valve (fully opened)

水管 **/ Water tubes**
CN = 铜镍/Copper/nickel
CU = 铜 /Copper
SS = 不锈钢 /Stainless steel

冷水连接部分 **/ Cooling water connection system**

O = 单通路 /1-pass
T = 2通路 /2-pass
F = 4通路 /4-pass
只适合1200+1700系列 /1200+1700 series only

导热片设置 /
Guide segment setting

规格 **/ Unit size**

连接类型 **/ Connection type**

NPT = -
SAE带O型圈
水侧NPT/
SAE with O-Ring,
waterside NPT/ = **S**
BSPF = **M**
SAE法兰 /SAE flange = **FM**

整体换热器
Complete cooler

不锈钢 **/ stainless steel**
1.4301
(+ Alu-fins)

Typ
500, 700, 1000, 1700 = **E**
1200 = **S**

EKM/SKM系列的技术数据

注意: 不正确的安装会导致热交换器的损坏

最大工作压力 / Maximum operating pressure
外壳 / Shell = 35 bar　　管子 / Tubes = 16 bar

TECHNICAL DATA EKM/SKM

CAUTION: Incorrect installation may lead to damage to the cooler.

工作温度 / Operating temperature: 5 - 95 °C

最大流量

MAXIMUM FLOW RATE

升/分钟 l/min	油/外壳 OIL/SHELL	水/管子 WATER/TUBES		
规格/VERSION		O	T	F
EKM - 500	75	45	22	-
EKM - 700	225	90	46	-
EKM - 1000	330	210	106	-
SKM - 1200	650	560	280	140
EKM - 1700	1500	980	490	245

UKC-G系列

SERIES UKC-G

产品描述

图中所示为油箱安装的形式包括螺纹口和带环热管的高性能冷却盘. 该紧凑型油/水换热器的冷却面积有0.15平方米到0.43平方米.

PRODUCT DESCRIPTION

The picture shows the Tank mounting case with thread and the high-performance Cooling tray with tubes. The compact Oil/water heat exchangers have a cooling surface of 0.15 m^2 to 0.43 m^2.

产品特点

- 可用于安装到油箱或齿轮箱
- 使用已有的螺纹口就可以很方便地安装换热器
- 经济, 节省空间
- 端帽: G1/2" 接水口
- 冷却效率取决于油箱或齿轮箱内的冷却管路和冷却循环

PRODUCT FEATURES

- Application for mounting in tank or gear box
- Easy assembly in existing screw threads for tank heaters
- Inexpensive, space saving solution
- End cap: G 1/2" Water connection
- Cooling efficiency depending on ciculation of cooling tubes in tank or gear box

发货状态

- 带端帽, 螺纹和垫圈

SHIPMENT

- Cooler with end cap, screws and washer

可选项

- 长度可根据要求

OPTIONS

- Special lengths on request

技术数据

最大工作压力 / Maximum operating pressure: = 10 bar

最大工作温度 / Maximum operating temperature = 95 °C

TECHNICAL DATA

管侧最大流量 / Maximum flow rate tubeside:

铜管 / Copper tubes	= 15 升/分钟 l/min
铜-镍管 / Copper-nickel tubes	= 25 升/分钟 l/min
不锈钢管 / Stainless steel tubes	= 25 升/分钟 l/min

材质

MATERIALS

	标准 / STANDARD
螺纹 / THREAD	黄铜 / Admirality
管路 / TUBES	铜, 铜-镍或不锈钢 / Copper, Copper-nickel or stainless steel
挡板 / BAFFELS	钢 / Steel
端帽 / END CAPS	铸铁 / Cast iron
垫圈 / GASKETS	丁腈橡胶 / Nitrile rubber

订货代码 ORDERING CODE

UKC - G1,5 - 550 - CU

U型管冷却装置
U-tube cooling device

螺纹连接规格
Threaded connection size
G 1,5″ = **1,5**
G 2″ = **2**

线性数据 (见图表)
Lineardimension (see chart)

CU = 铜管/Tubes copper
CN = 铜-镍管 (90:10)
Tubes copper-nickel (90:10)
SS = 不锈钢(1.4571)
Stainless steel (1.4571)

UKC-G1,5 系列尺寸 DIMENSIONS UKC-G1,5

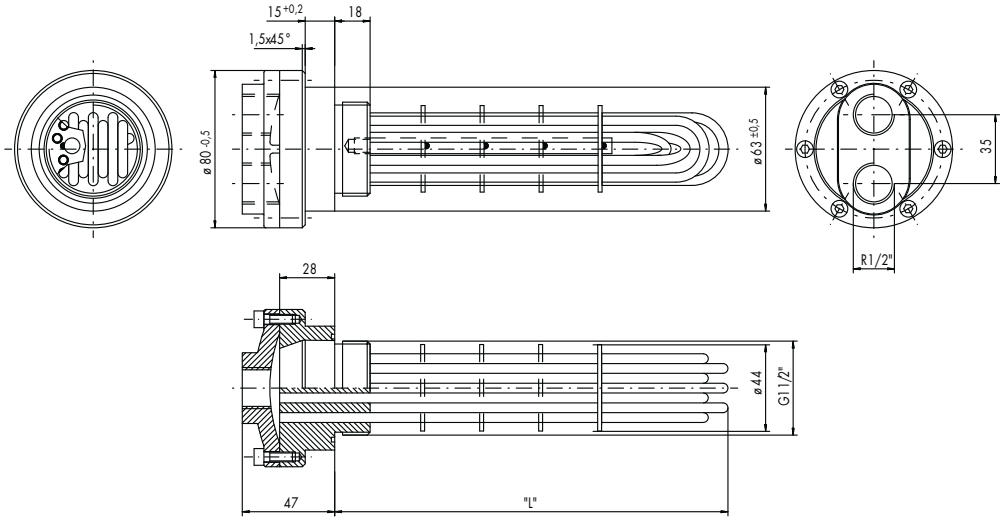

规格 SIZE	L
x 11	190
x 12	550
x 13	580
x 14	600
x 15	630
x 16	640
x 17	690
x 18	705
x 19	780
x 20	805
x 21	950
x 22	1400

UKC-G2 系列尺寸 DIMENSIONS UKC-G2

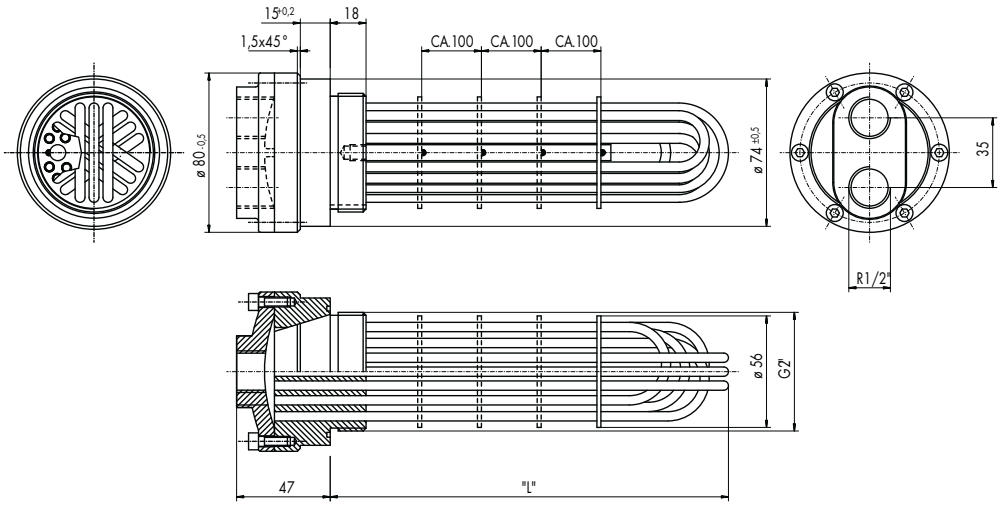

规格 SIZE	L
xx 1	550
xx 2	840
xx 3	850
x 4	930
xx 5	940
xx 6	1030
xx 7	1070
xx 8	1085
xx 9	1170
xx10	1190

工业用油/气热交换器

OIL / AIR HEAT EXCHANGERS FOR INDUSTRIAL USE

LKI 系列

SERIES LKI

产品描述

新一代LKI系列有冷却器，噪音水平大大降低. 该系列冷却器适合于静态安装，用于液压油或润滑油的冷却. 该系列可以附加低速通风机，并且特别设计的壳体有助于保证低噪音水平. 该系列冷却器有单通路或2通路因此可以满足低和高流量油冷却的需要.

PRODUCT DESCRIPTION

With this new generation of LKI oil coolers, the noise level has been successfully reduced. These coolers are ideally suited for stationary installations – for the cooling of hydraulic or lubricating oils. The range has been extended to include slow-running ventilators and the housings have been optimised in order to archieve the very low noise level. In order to make the cooler range as comprehensive as possible, the smaller models are also available as single or dual versions, thus covering oil-cooling requirements for both low and high oil flow rates.

产品特点

- 测试压力: 静态 25 bar, 依据 DIN 50104
- 工作压力: 16 bar
  (最小 2百万工作循环, 0–16 bar, 2 Hz, 60°C)
- 结构紧凑的油冷却器
- 冷却能力强
- 压力损失小
- 最高操作温度: 120°C
- 灵活性高
- 从 LKI700 以上, 配 2" SAE 法兰
- 可冷却: 液压油, HFA, HFB, HFC, HFD 等液体
  粘度可达 v = 100 x 10 – 6 m^2/s, 水/乙二醇 最低 65:35
  在水环境中, 需防腐保护
- 冷却介质: 空气
- 可配各种电机; 液压马达/12/24 V

PRODUCT FEATURES

- Testing pressure: 25 bar static according to DIN 50104
- Operating pressure: 16 bar (min. 2 Mill. Cycles from 0–16 bar at 2 Hz and 60°C)
- Compact oil-cooler
- High cooling performance
- Low pressure loss
- Max. operating temperature: 120°C
- High flexibility
- 2" SAE flange from LKI 700 upward
- Cooling of: Oil, HFA, HFB, HFC, HFD fluids up to v = 100 x 10^{-6} m^2/s, water/glycol min. 65:35 – under no circumstances water without corrosion prevention
- Coolant: air
- Variable motor; Hydro /12/24V

材质

MATERIALS

	标准 STANDARD	海水 SEA WATER
冷却块/COOLING BLOCK	铝 / Aluminium, RAL 9006	2-组分喷漆/2-component paint
壳体/HOUSING	钢/Steel, RAL 5009	电镀/Electroplated
风扇/FAN	聚丙二醇 / PPG	
安全栅/SAFETY BARRIER	钢发蓝镀铬处理/Steel with blue-chrome finish	
支脚/FEET	电镀/galvanized	

LKI 系列计算示例

举例1: (已知冷却功率)
冷却功率 = 65 kW
最高油温 = 70°C
环境温度 = 30°C
油流量 = 250 升/分钟 / l/min
具体冷却性能:

$$\frac{Q}{T_{油温} - T_{环境温度}} \quad \frac{65}{70 - 30}$$

= 1,63 kW/°C

可选:
LKI-710-400-6 或 LKI 810-400-8.
最终选择需考虑噪音水平

举例 2:
(冷却功率未知)
通常, 电机功率(柴油机或电动机)的 25–30% 的热量会传递给液压油
电机功率 = 30 kW
冷却功率 (0.3 x 30 kW) = 9.0 kW
最高油温 = 60°C
环境温度 = 30°C
油流量 = 35 升/分钟 / l/min
具体冷却功率

$$\frac{Q}{T_{油温l} - T_{环境温度}} \quad \frac{9}{60 - 30}$$

= 0,3 kW / °C

可选:
LKI-210-400-2 或 LKI 310-400-6. 最终选择需考虑噪音水平

油冷却:

$$\Delta t\ Öl = \frac{36 \times Q}{V_{öl}} = \frac{36 \times 9}{35}$$

= 9,26 °C

Q = 冷却功率 [kW]
$T_{Öl}$ = 最高油温 [°C]
T_{umg} = 环境温度 [°C]
$V_{Öl}$ = 油流量 [l/min]

EXAMPLE CALCULATION LKI

Example 1: (If required cooling performance is known)
Cooling performance = 65 kW
Max. oil temperature = 70°C
Ambient temperature = 30°C
Oil flow rate = 250 l/min
Special cooling performance:

$$\frac{Q}{T_{öl} - T_{umg}} \quad \frac{65}{70 - 30}$$

= 1,63 kW/°C

Options:
LKI-710-400-6 or LKI 810-400-8. The selection depends on any possible noise restrictions.

Example 2:
(If the required cooling performance is not known).
Normally, there is a heat transfer to the oil of 25–30% of the motor performance (diesel motor or electric motor)
Motor performance = 30 kW
Cooling performance
(0.3 x 30 kW) = 9.0 kW
Max. oil temperature = 60°C
Ambient temperature = 30°C
Oil flow rate = 35 l/min
Special cooling performance:

$$\frac{Q}{T_{öl} - T_{umg}} \quad \frac{9}{60 - 30}$$

= 0.3 kW / °C

Options:
LKI-210-400-2 or LKI 310-400-6. The selection depends on any possible noise restrictions.

Oil cooling:

$$\Delta t\ Öl = \frac{36 \times Q}{V_{öl}} = \frac{36 \times 9}{35}$$

= 9.26 °C

Q = Cooling performance [kW]
$T_{Öl}$ = max. oil temperature [°C]
T_{umg} = Ambient temperature [°C]
$V_{Öl}$ = Oil flow rate [l/min]

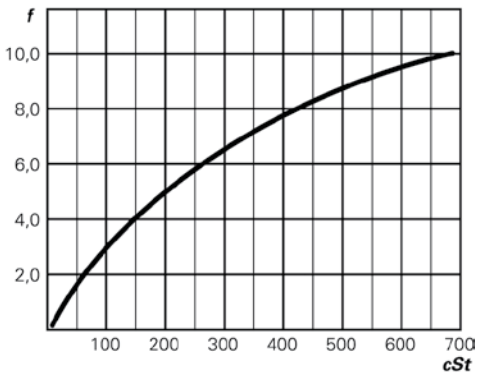

不同粘度下, 压力损失的修正系数
CORRECTION FACTOR FOR THE PRESSURE LOSS FOR OTHER VISCOSITIES

$$\Delta p_{öl} = \Delta p\ 30_{cSt} \times f$$

LKI 110-1010 系列的性能参数

PERFORMANCE DATA LKI 110-1010

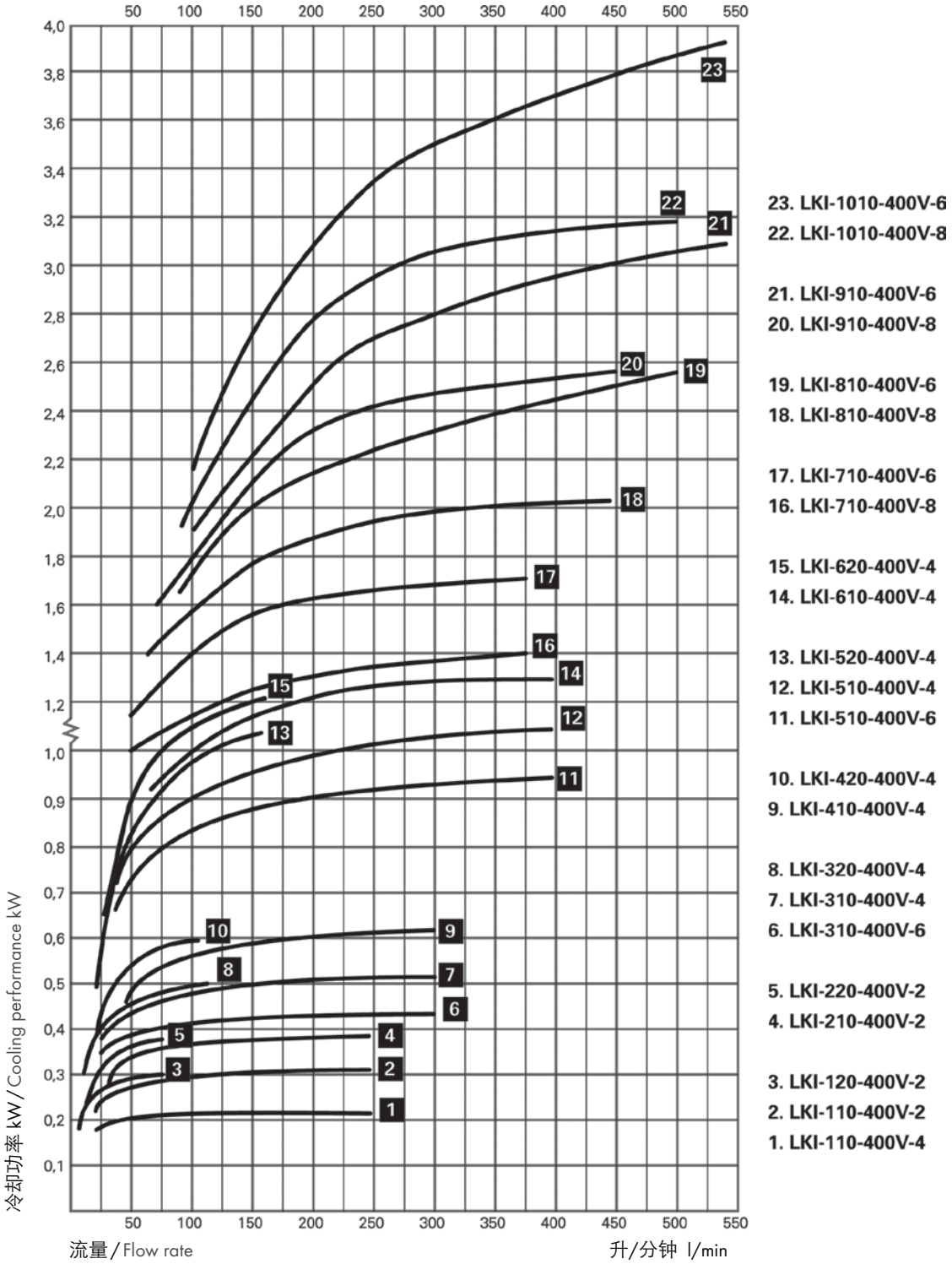

具体冷却效率的计算是依据油温 60°C，环境温度 20°C – 因此温差 40°C. 数据对应于 ISO VG32 液压油粘度 30 cSt. 如有不同，请查第17页图获得对应的修正系数.

The calculation of the specific cooling performance is based on an oil temperatureof 60°C, an ambient temperature of 20°C – thus a temperature difference of 40°C. The figures apply to ISO VG32 hydraulic oil with 30 cSt. For variances, Δp is multiplied by the correction factor f from the diagram on page 17.

LKI-100 / 200

LKI-100 / 200

尺寸

DIMENSIONS

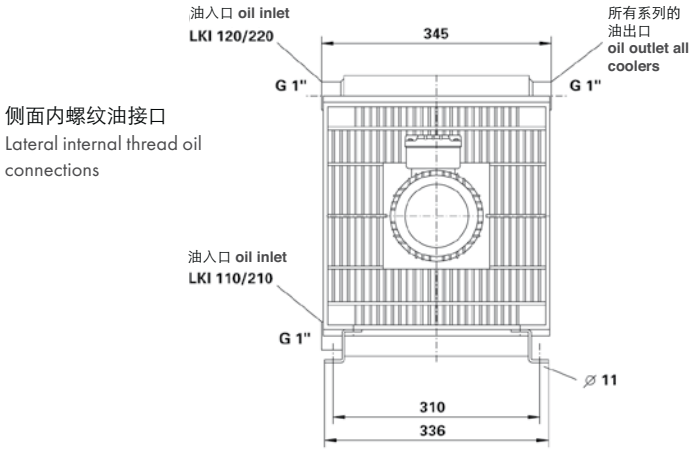

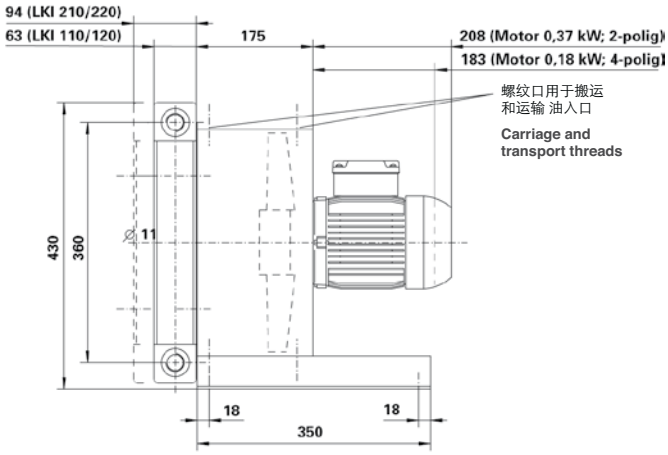

冷却功率 COOLING PERFORMANCE

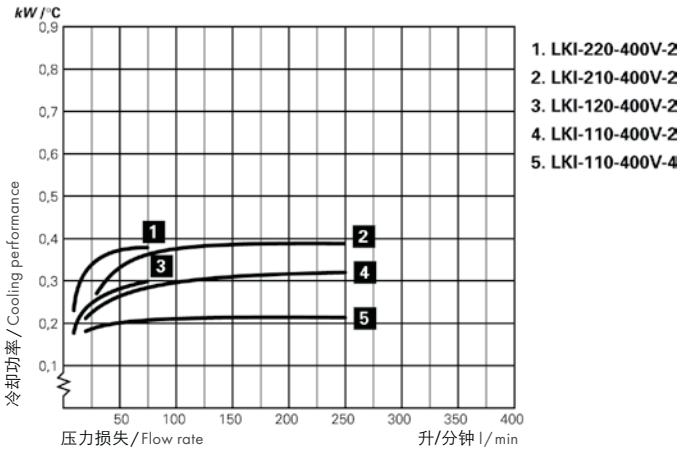

压力损失 PRESSURE LOSS

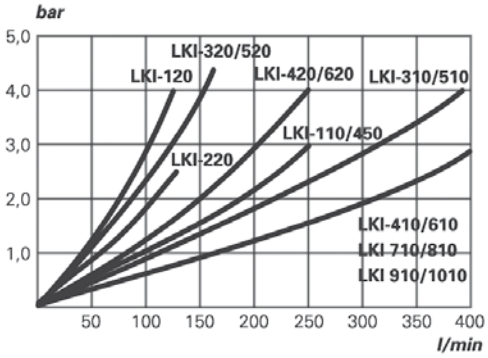

技术数据

TECHNICAL DATA

规格 SIZE	电机功率 MOTOR PERFORMANCE kW	电流消耗 POWER CONSUMPTION A	转速 转/分钟 REVOLUTIONS min^{-1}	气流量 AIR FLOW RATE m^3/s	噪音水平 1米/7米 (分贝)* NOISE LEVEL* 1m/7m (dBA)	重量 WEIGHT kg
LKI-110-400 V-2	0,37	0,88	3000	1,29	77/62	17
LKI-120-400 V-2	0,37	0,88	3000	1,29	77/62	17
LKI-110-400 V-4	0,18	0,58	1500	0,49	64/50	17
LKI-120-400 V-4	0,18	0,58	1500	0,49	64/50	17
LKI-210-400 V-2	0,37	0,88	3000	1,18	79/64	20
LKI-220-400 V-2	0,37	0,88	3000	1,18	79/64	20
LKI-210-400 V-4	0,18	0,58	1500	0,50	64/50	20
LKI-220-400 V-4	0,18	0,58	1500	0,50	64/50	20

* 受室内环境, 自身频率, 油接口, 粘度等影响可能偏差 ±3 dB(A)

* May vary by ±3 dB(A) due to room characteristics, own frequencies, oil connections, viscosities etc.

LKI-300 / 400

LKI-300 / 400

尺寸

LKI 100 - 600:
侧面内螺纹油接口
Lateral internal thread oil connections

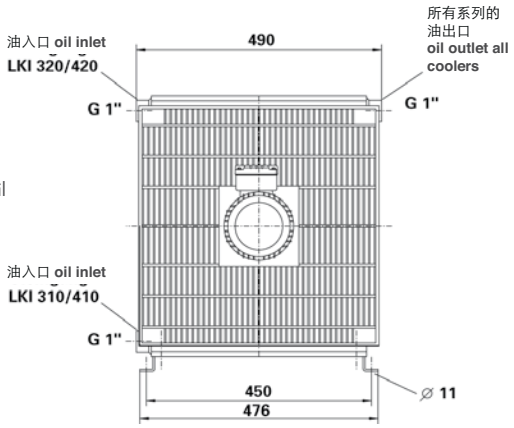

DIMENSIONS

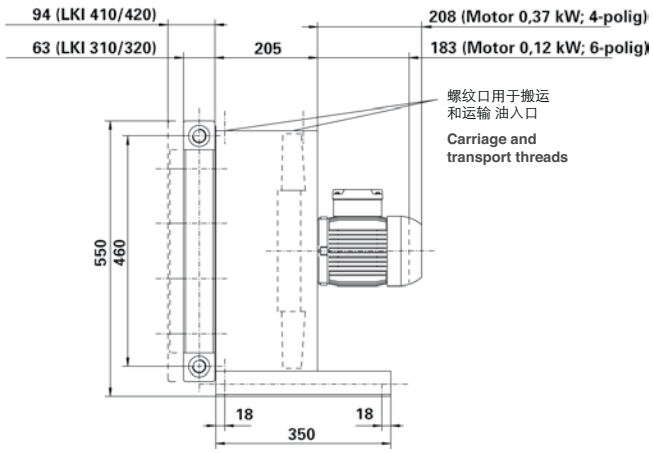

冷却功率 COOLING PERFORMANCE

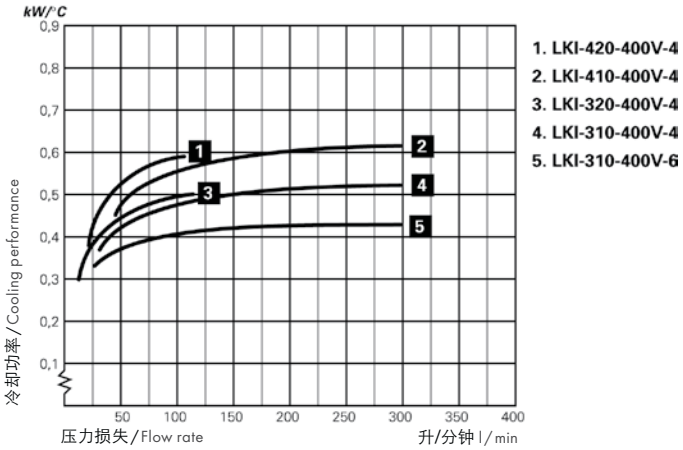

压力损失 PRESSURE LOSS

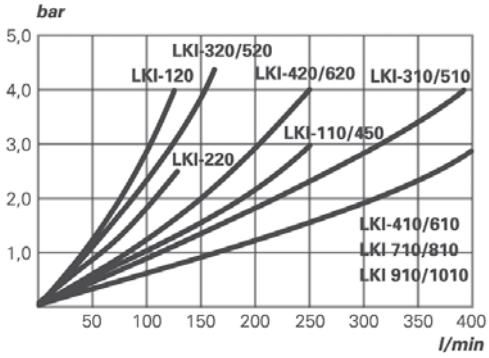

技术数据

TECHNICAL DATA

规格 SIZE	电机功率 MOTOR PERFORMANCE kW	电流消耗 POWER CONSUMPTION A	转速 转/分钟 REVOLUTIONS min⁻¹	气流量 AIR FLOW RATE m³/s	噪音水平 1米/7米 (分贝)* NOISE LEVEL* 1m/7m (dBA)	重量 WEIGHT kg
LKI-310-400 V-4	0,37	0,89	1500	0,74	73/58	25
LKI-320-400 V-4	0,37	0,89	1500	0,74	73/58	25
LKI-310-400 V-6	0,12	0,48	1000	0,59	65/51	26
LKI-320-400 V-6	0,12	0,48	1000	0,59	65/51	26
LKI-410-400 V-4	0,37	0,48	1500	0,76	75/63	32
LKI-420-400 V-4	0,37	0,48	1500	0,76	75/63	32
LKI-410-400 V-6	0,12	0,48	1000	0,55	67/53	33
LKI-420-400 V-6	0,12	0,48	1000	0,55	67/53	33

* 受室内环境, 自身频率, 油接口, 粘度等影响可能偏差 ±3 dB(A)

* May vary by ±3 dB(A) due to room characteristics, own frequencies, oil connections, viscosities etc.

LKI-500 / 600

LKI-500 / 600

尺寸

DIMENSIONS

LKI 100 - 600:
侧面内螺纹油接口
Lateral internal thread oil connections

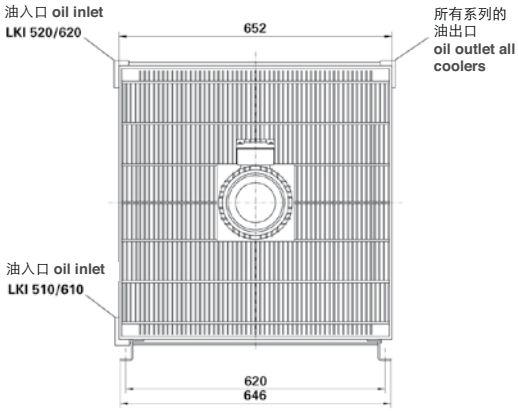

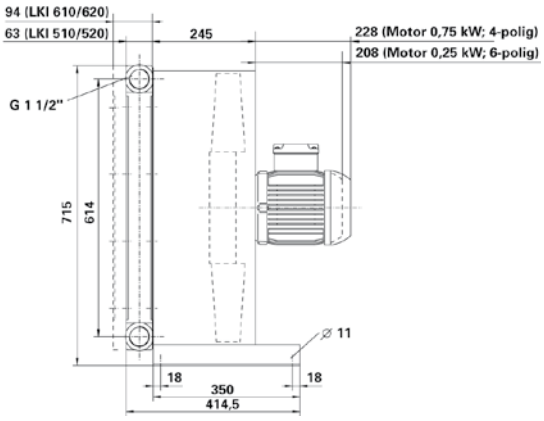

冷却功率 COOLING PERFORMANCE

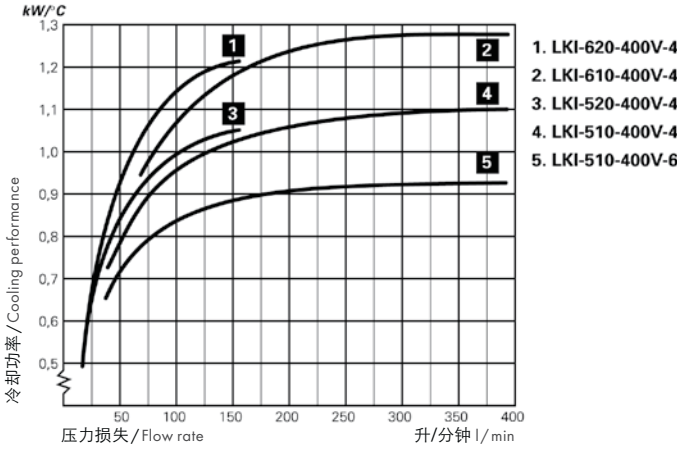

压力损失 PRESSURE LOSS

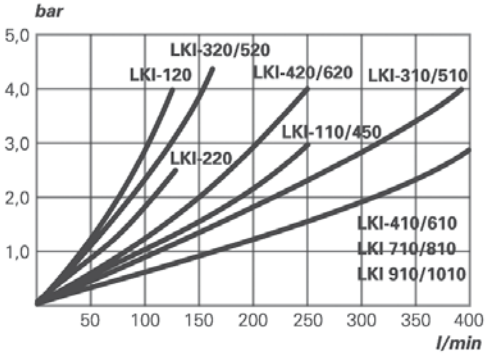

技术数据

TECHNICAL DATA

规格 SIZE	电机功率 MOTOR PERFORMANCE kW	电流消耗 POWER CONSUMPTION A	转速 转/分钟 REVOLUTIONS min^{-1}	气流量 AIR FLOW RATE m^3/s	噪音水平 1米/7米 (分贝)* NOISE LEVEL* 1m/7m (dBA)	重量 WEIGHT kg
LKI-510-400 V-4	0,75	1,71	1500	1,70	80/70	40
LKI-520-400 V-4	0,75	1,71	1500	1,70	80/70	40
LKI-510-400 V-6	0,25	0,99	1000	1,06	70/57	37
LKI-520-400 V-6	0,25	0,99	1000	1,06	70/57	37
LKI-610-400 V-4	0,75	1,71	1500	1,50	80/70	49
LKI-620-400 V-4	0,75	1,71	1500	1,50	80/70	49
LKI-610-400 V-6	0,25	0,99	1000	0,95	70/57	49
LKI-620-400 V-6	0,25	0,99	1000	0,95	70/57	49

* 受室内环境, 自身频率, 油接口, 粘度等影响可能偏差 ±3 dB(A)

* May vary by ±3 dB(A) due to room characteristics, own frequencies, oil connections, viscosities etc.

LKI-700

LKI-700

尺寸

DIMENSIONS

LKI 700 - 1000:
侧面内螺纹油接口,
前面或后面SAE法兰
Lateral internal thread oil connections
and SAE flange at front or rear

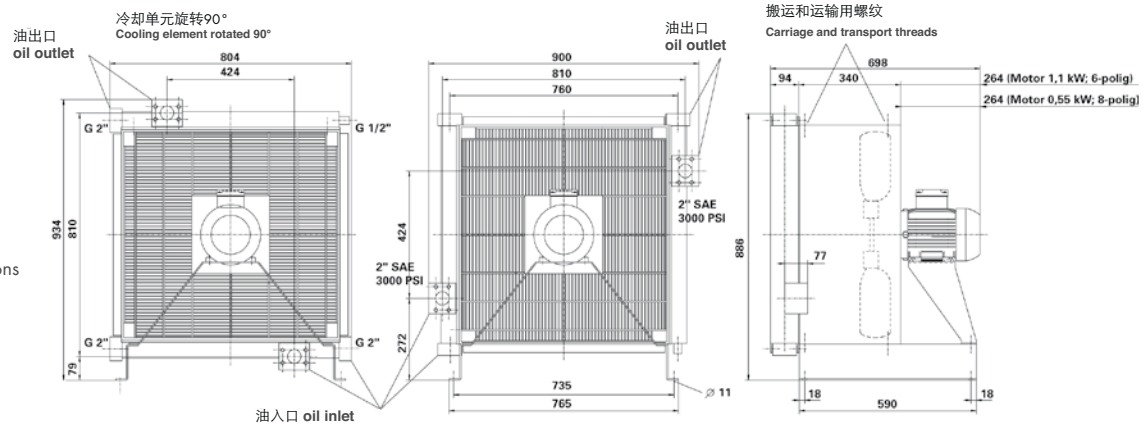

冷却功率 COOLING PERFORMANCE

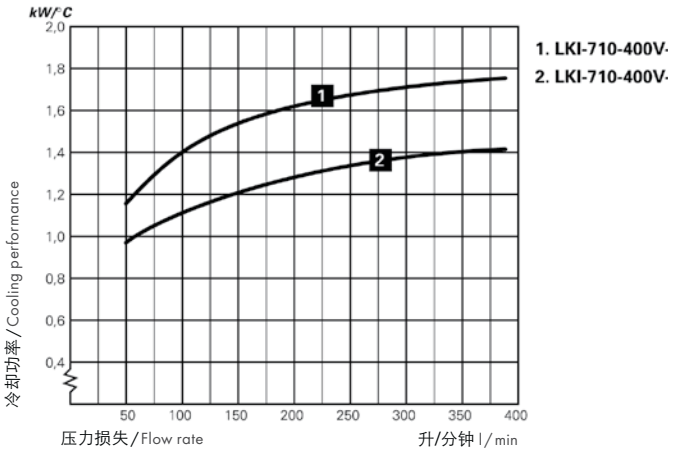

压力损失 PRESSURE LOSS

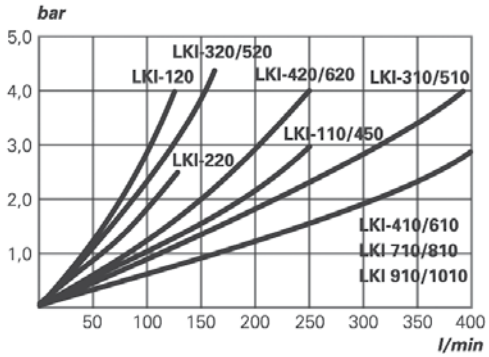

技术数据

TECHNICAL DATA

规格 SIZE	电机功率 MOTOR PERFORMANCE kW	电流消耗 POWER CONSUMPTION A	转速 转/分钟 REVOLUTIONS min^{-1}	气流量 AIR FLOW RATE m^3/s	噪音水平 1米/7米 (分贝)* NOISE LEVEL* 1m/7m (dBA)	重量 WEIGHT kg
LKI-710-400 V-6	1,1	2,56	1000	2,14	77/64	91
LKI-710-400 V-8	0,55	2,56	750	1,56	69/56	91

* 受室内环境, 自身频率, 油接口, 粘度等影响可能偏差 ±3 dB(A)

* May vary by ±3 dB(A) due to room characteristics, own frequencies, oil connections, viscosities etc.

LKI-800

LKI-800

尺寸

DIMENSIONS

LKI 700 - 1000:
侧面内螺纹油接口,
前面或后面SAE法兰
Lateral internal thread oil connections
and SAE flange at front or rear

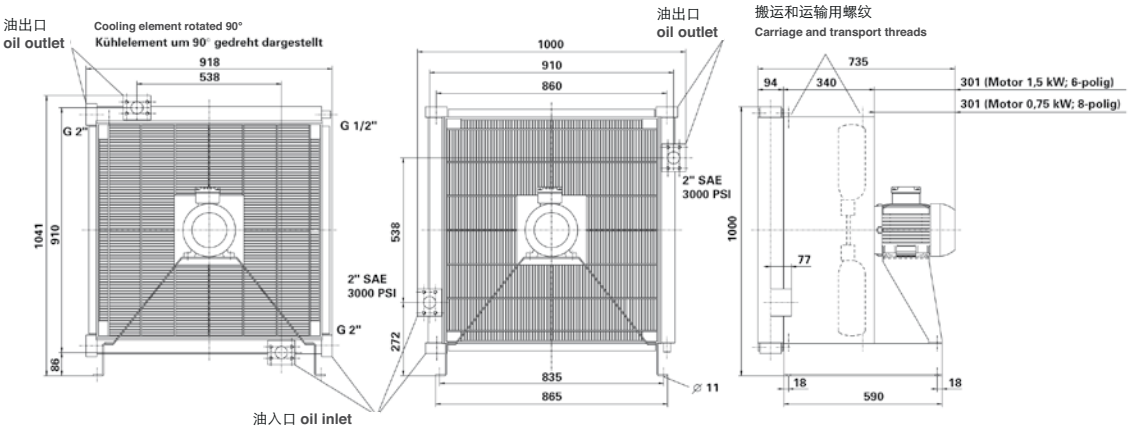

冷却功率 COOLING PERFORMANCE

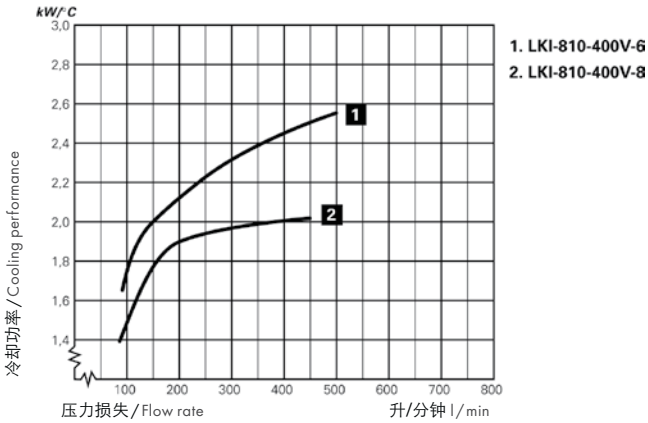

压力损失 PRESSURE LOSS

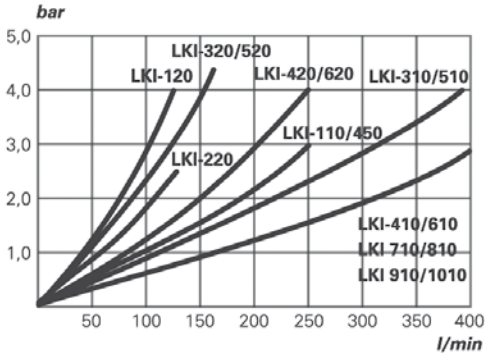

技术数据

TECHNICAL DATA

规格 SIZE	电机功率 MOTOR PERFORMANCE kW	电流消耗 POWER CONSUMPTION A	转速 转/分钟 REVOLUTIONS min⁻¹	气流量 AIR FLOW RATE m³/s	噪音水平 1米/7米 (分贝)* NOISE LEVEL* 1m/7m (dBA)	重量 WEIGHT kg
LKI-810-400 V-6	1,5	3,78	1000	3,38	79/68	111
LKI-810-400 V-8	0,75	2,42	750	2,64	72/60	111

* 受室内环境, 自身频率, 油接口, 粘度等影响可能偏差 ±3 dB(A)

* May vary by ±3 dB(A) due to room characteristics, own frequencies, oil connections, viscosities etc.

LKI-900

LKI-900

尺寸

DIMENSIONS

LKI 700 - 1000:
侧面内螺纹油接口，
前面或后面SAE法兰
Lateral internal thread oil connections
and SAE flange at front or rear

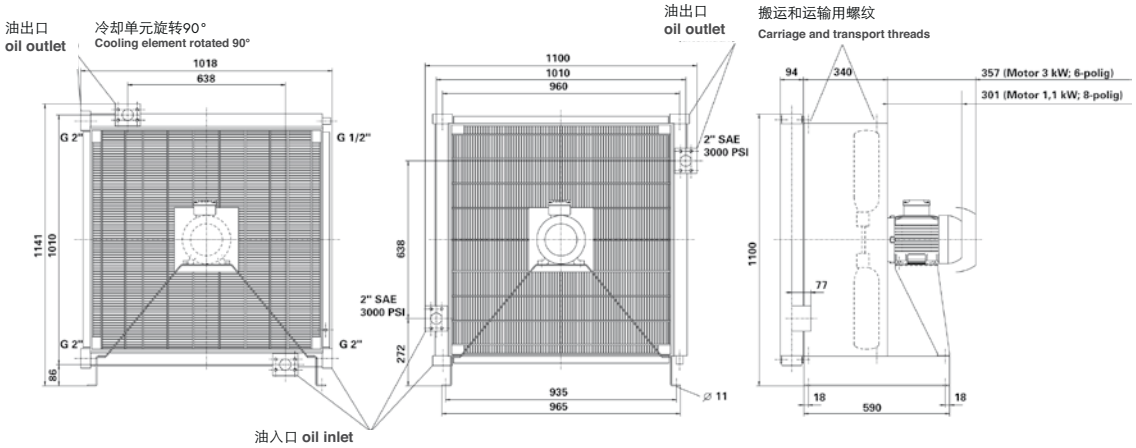

冷却功率 COOLING PERFORMANCE

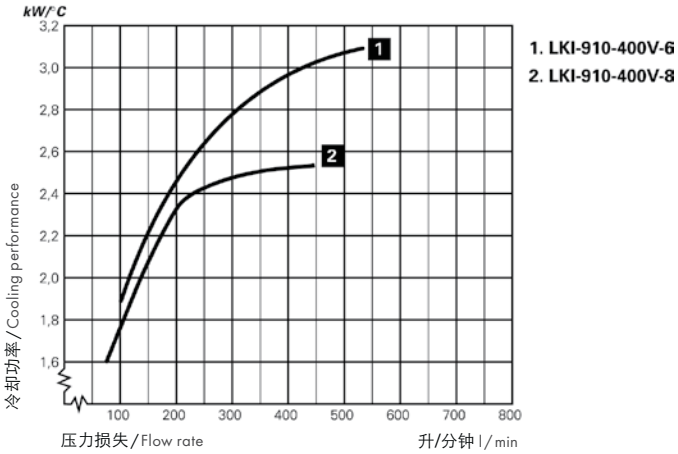

压力损失 PRESSURE LOSS

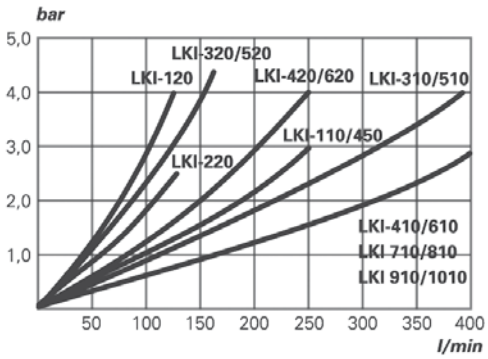

技术数据

TECHNICAL DATA

规格 SIZE	电机功率 MOTOR PERFORMANCE kW	电流消耗 POWER CONSUMPTION A	转速 转/分钟 REVOLUTIONS min^{-1}	气流量 AIR FLOW RATE m^3/s	噪音水平 1米/7米 (分贝)* NOISE LEVEL* 1m/7m (dBA)	重量 WEIGHT kg
LKI-910-400 V-6	3	6,28	1000	4,32	85/72	137
LKI-910-400 V-8	1,1	3,78	750	3,07	76/64	131

LKI-1000

LKI-1000

尺寸

DIMENSIONS

LKI 700 - 1000:
侧面内螺纹油接口,
前面或后面SAE法兰
Lateral internal thread oil connections
and SAE flange at front or rear

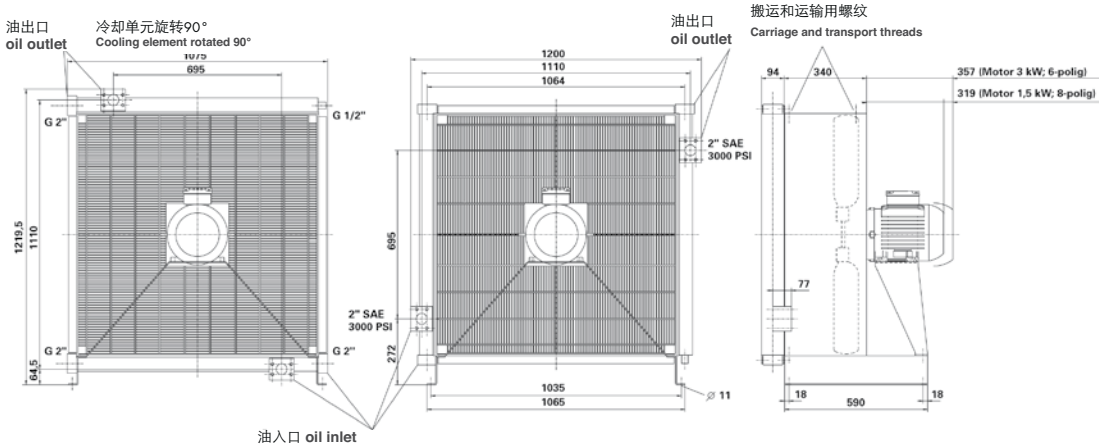

冷却功率 COOLING PERFORMANCE

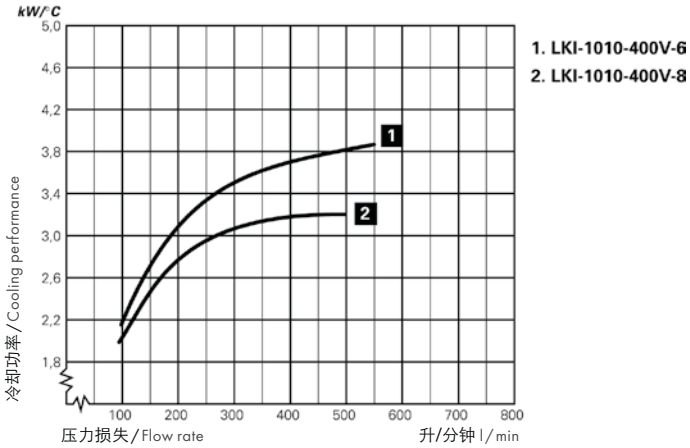

压力损失 PRESSURE LOSS

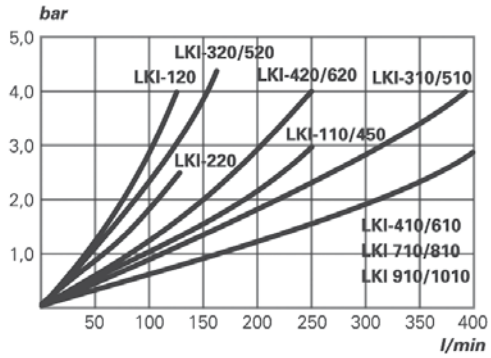

技术数据

TECHNICAL DATA

规格 SIZE	电机功率 MOTOR PERFORMANCE kW	电流消耗 POWER CONSUMPTION A	转速 转/分钟 REVOLUTIONS min⁻¹	气流量 AIR FLOW RATE m³/s	噪音水平 1米/7米 (分贝)* NOISE LEVEL* 1m/7m (dBA)	重量 WEIGHT kg
LKI-1010-400 V-6	3	6,28	1000	5,38	84/71	157
LKI-1010-400 V-8	1,5	3,78	750	3,84	76/64	151

LKI 系列订货代码 ORDERING CODE LKI

LKI - 110 - 400V - 2 - G - L

应用 / Application

工业用途的冷却器 / Cooler for industrial use = **LKI**

移动冷却器 / Mobile cooler* = **LKM**

带液压马达的冷却器 / Cooler with hydraulic motor* = **LKHYD**

*(按要求 / on request)

规格 / Unit size

1
2
3
4
5
6
7
8
9
10

代码 / Version

单通路 / 1 way = **10**
2 通路 / 2 way = **20**

电机型号 / Motor type

400 = 400 V多级电机 / 400 V multi-stage motor

特殊电压电机, 液压和防爆保护可按要求
Motors with spezial voltages, hydraulics and explosion protection available on request.

转速 / Revolutions per minute

2 = 2 polig / 3000 min^{-1}
4 = 4 polig / 1500 min^{-1}
6 = 6 polig / 1000 min^{-1}
8 = 8 polig / 750 min^{-1}

- = 标准 / Standard
G 90 = 冷却单元旋转90°
Cooling bock turned 90°
G 180 = 冷却单元旋转180°
Cooling bock turned 180°

- = 标准 / Standard
L = 平板式, 无支脚, 带紧固件
flat version, no feet, with mounting

工业用部分流量冷却单元

PARTIAL FLOW COOLING UNIT FOR INDUSTRIAL APPLICATION

TFS/A系列

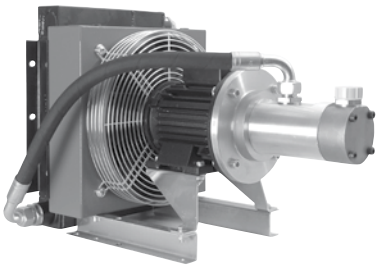

SERIES TFS/A

产品描述

TFS/A系列是紧凑型部分流量冷却单元. 可以提高液压系统的实用性和可靠性. 该系列由液压泵和油空气冷却器组合而成, TFS/A系列动力自主, 可以独立于主系统单独运行. 因此, 可以确保持续冷却.

PRODUCT DESCRIPTION

The TFS/A is a compact partial flow cooling unit. It was developed to improve the availability and reliability of hydraulic systems. Due to its combination of a motor pump unit and an oil air cooler in one device, the TFS/A is an autonomous unit, which can be operated independently of the main system. Thereby, continuous cooling is ensured.

产品特点

- 紧凑设计
- 工作噪音降低
- 易损零件数量减少因此简化维护
- 标配含多款电机
- 适合各种安装位置
- 可选: 低噪音齿轮泵

PRODUCT FEATURES

- Compact design
- Reduced noice operation
- Ease of maintenance since the number of wearing parts has been consequently reduced
- Equipped with multirange motors as standard equipment
- Any mounting position is possible
- Option: Low noise gear pump

优点

- 可以延长液压元件的使用寿命
- 提高应用的可靠性
- 提高定位精度
- 可以对已有系统进行应用改造

ADVANTAGES

- Extension of the service life of the hydraulic components
- Enhancement of the application reliability
- Improvement of the positioning accuracy
- Unproblematical retrofitting on existing systems is possible

冷却能力图

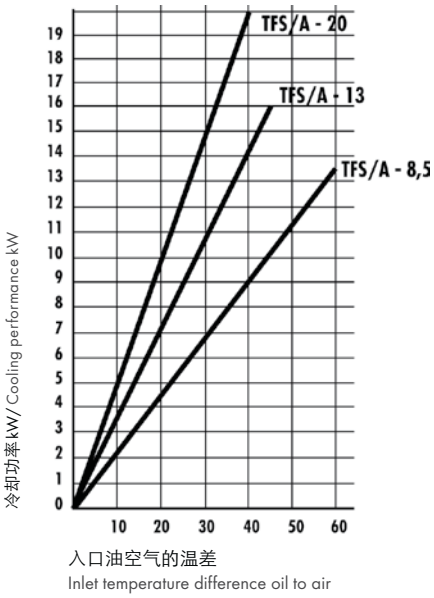

COOLING CAPACITY DIAGRAM

规格 SIZE	预估 ETD (kW Δt 40 °C)	标准泵 PUMP (L/MIN)
TFS / A - 8,5	8,5	30
TFS / A - 13	13	38
TFS / A - 20	20	50

油空气冷却器 (带泵) 的冷却能力相对于入口油空气的温差的关系图

Cooling capacity of the oil-air cooler (with feed pump) as a function of the input temperature difference of oil to air.

TFS / A 系列尺寸

UNIT DIMENSIONS TFS /A

TFS / A - ... F

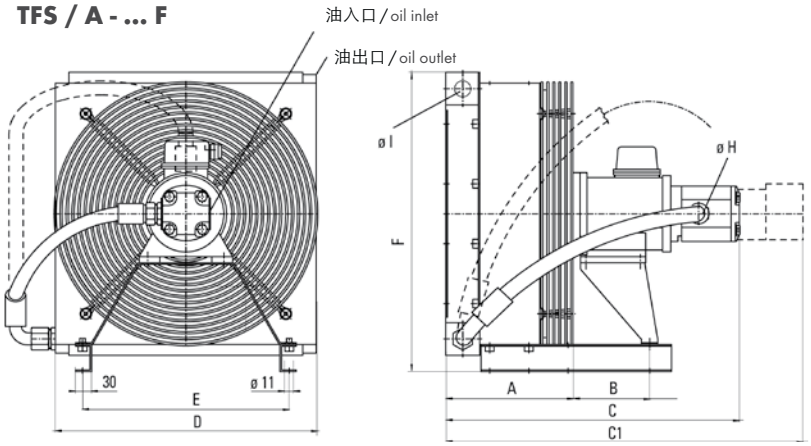

in mm	... -8,5	... -13	... -20
A	204	237	237
B	150	150	150
C	525	552	611
C1	632	660	690
D	342	480	480
E	240	380	380
F	430	547	547
G	11	11	11
H	G1"	G1"	G1"
I	G1"	G1"	G1"

TFS / A - ... T

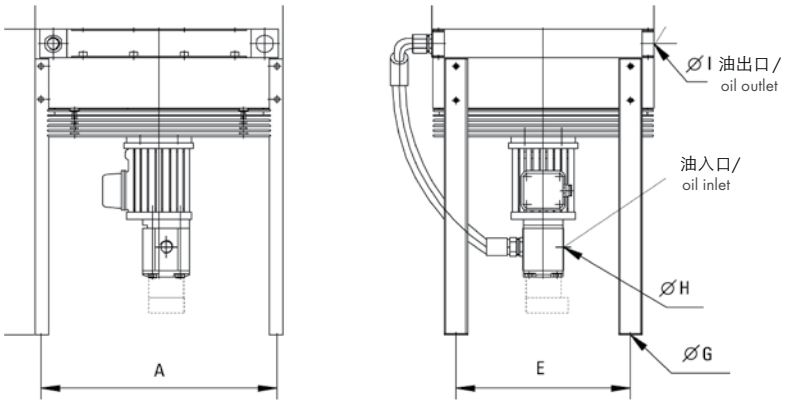

in mm	... -8,5	... -13	... -20
W min	150	150	150
A	374	514	514
B	420	520	520
D	342	480	480
E	240	380	380
F	627	665	696
G	11	11	11
H	G1"	G1"	G1"
I	G1"	G1"	G1"

TFS / A - ... WH / DH

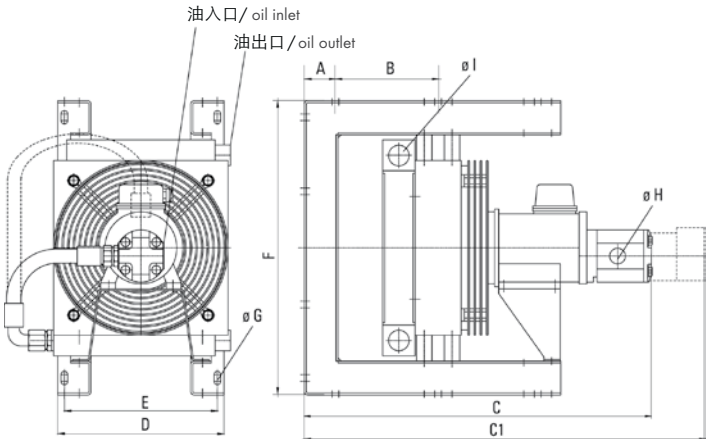

in mm	... -8,5	... -13	... -20
A	61	70	70
B	200	263	263
C	677	757	816
C1	785	864	923
D	342	480	480
E	298	440	440
F	572	714	714
G	26 x 13	11	11
H	G1"	G1"	G1"
I	G1"	G1"	G1"

TFS / A 系列订货代码

ORDERING CODE TFS / A

TFS / A - 8,5 - 400 - F - 04 - 19

型号 / **Model**

冷却能力 / **Cooling capacity**

8,5 kW = **8,5**
13 kW = **13**
20 kW = **20**
(bei ETD / at ETD = 40°C)

电机电压 / **Rated voltage of motor**

多级电机 / Multirange motor = **400**
230 / 400 V 50 Hz　240 / 420 V 50 Hz
254 / 440 V 60 Hz　280 / 480 V 60 Hz

安装方式 / **Mounting**
F = 标准支脚 / Standard feet
WH/DH = 挂墙式/吊顶式/螺栓固定 Wall/ceiling bracket / fixation mur
T = 表的安装 / Table mounting

系列 / **Series**
04 = 螺杆泵 / Screw pump
05 = 螺杆泵 / Screw pump
包括1.1kW电机 / incl. 1.1 kW Motor
只适用于TFS/A 8.5 / only for TFS/A 8,5

型号规格 / **Device type**

4,5 = 4,5 ccm
6 = 6 ccm
8,3 = 8,3 ccm
11 = 11 ccm
14 = 14 ccm
16 = 16 ccm
19 = 19 ccm - 8,5 kW标准 / Standard
27 = 27 ccm - 13 kW 标准 / Standard
36 = 36 ccm - 20 kW 标准 / Standard

技术数据

TECHNICAL DATA

产品尺寸	UNIT SIZE		... -8,5	... -13	... -20
电机功率*	Electrical connected load*	kW	1,1	1,1	1,5
名义电流 400 V/50 Hz*	Rated current at 400 V/50 Hz*	A	1,7	2,6	3,6
转速 50 Hz*	Revolutions at 50 Hz*	U/min	1385	1410	1410
空气流量*	Air flow*	m^3/h	1131	2565	2232
粘度范围	Viscosity range	mm^2/s	10-300		
允许介质工作温度	Permissible medium operating temperature	°C	100	100	100
允许介质工作压力 40 mm^2/s	Permissible medium operating pressure at 40 mm^2/s	bar	10	10	5
噪音水平	Sound intensity level	dB (A)	64	74	76
最大入口高度	Maximum suction height	m	1	1	1

*所有参数基于 400 V/50Hz.

*All declarations refer to a voltage of 400 V/50 Hz.

HBE 保留随时更新技术参数的权利

HBE reserves the right to modify technical data at any time.

产品

DELIVERY PROGRAMME

铝制油箱 Oil tanks made of aluminium	
清洗端盖和附件 液位计和温度计 Cleaning covers and further tank accessories Level- and temperature indicators	
油箱加热器 Tank heaters	
钟罩和附件 Bellhousings and accessories	
带冷却器的钟罩 各类换热器 DOC® 钎焊板式换热器 Bellhousing with oil-cooler Heat exchangers DOC® Brazed plate heat exchanger	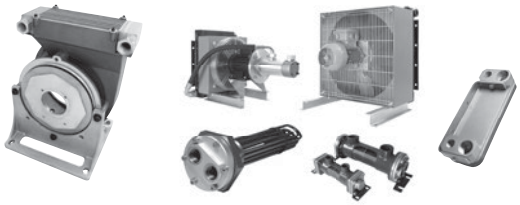
SOFTEX® 弹性 和 无背隙联轴器 SOFTEX® elastic and no backlash shaft couplings	
STAREX® 齿面联轴器 STAREX® flexible couplings	
内燃机联轴器 Diesel engine couplings	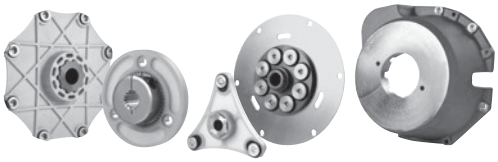

HBE fluid equipment

上海新洁流体科技有限公司
联系人：袁建红 经理
电话：13918089112
邮箱：yuanjianhong@vip.sina.com

TÜV NORD DIN EN ISO 9001

e.holding
FLUID TECHNOLOGY GROUP
www.e-holding.de

08/14 www.plakart.de